NSTS 07700, Volume XIV,

Appendix 7 (Formerly JSC 10615)

System Description and Design Data -

Extravehicular Activities

DESCRIPTION OF CHANGES TO

SYSTEM DESCRIPTION AND DESIGN DATA - EXTRAVEHICULAR ACTIVITIES
NSTS 07700, VOLUME XIV, APPENDIX 7

CHANGE NO.	DESCRIPTION/AUTHORITY	DATE	PAGES AFFECTED
REV J	Complete revision; replaces and supersedes JSC 10615 (reference CR D07700-014-007-00). The following CR's are included: D07700-014-007-01, D07700-014-007-02 D07700-014-007-03, D07700-014-007-04 D07700-014-007-05, D07700-014-007-06 D07700-014-007-07.	3/29/88	ALL
1	The following CR is included: D07700-014-007-10.	6/14/89	Figure 1
	Reformat Word for Windows.	7/96	ALL
2	The following CR is included: D07700-014-007-0020.	4/19/00	II.2-2, II.2-3, II.2-5, II.2-13, II.2-19 thru II.2-23
REV K	Complete revision; replaces and supercedes JSC 10615 (reference CR D07700-014-007-00). The following CR is included: D07700-014-007-0019	9/20/00	ALL

Preface

This document is designed to be used in conjunction with the series of documents illustrated in Figure 1. This information source describes the constraints, limitations, and capabilities involved in performing Extravehicular Activity (EVA) for the Space Shuttle Program (SSP). It also serves, through Part II, as a set of EVA equipment design requirements.

Specific agreements for EVA and EVA equipment design must be specified in the individual payload integration plans.

Effective with the publication of this revision, configuration control of this document will be accomplished through the application of the procedures contained in NSTS 07700, Volume IV, Configuration Management Requirements.

Questions and recommendations concerning this document should be addressed to:

Manager, Space Shuttle Customer and Flight Integration Office
National Aeronautics and Space Administration
Lyndon B. Johnson Space Center
Houston, Texas 77058

Original signed by William J. Moon

William J. Moon, Acting Manager
Customer and Flight Integration
Space Shuttle Program

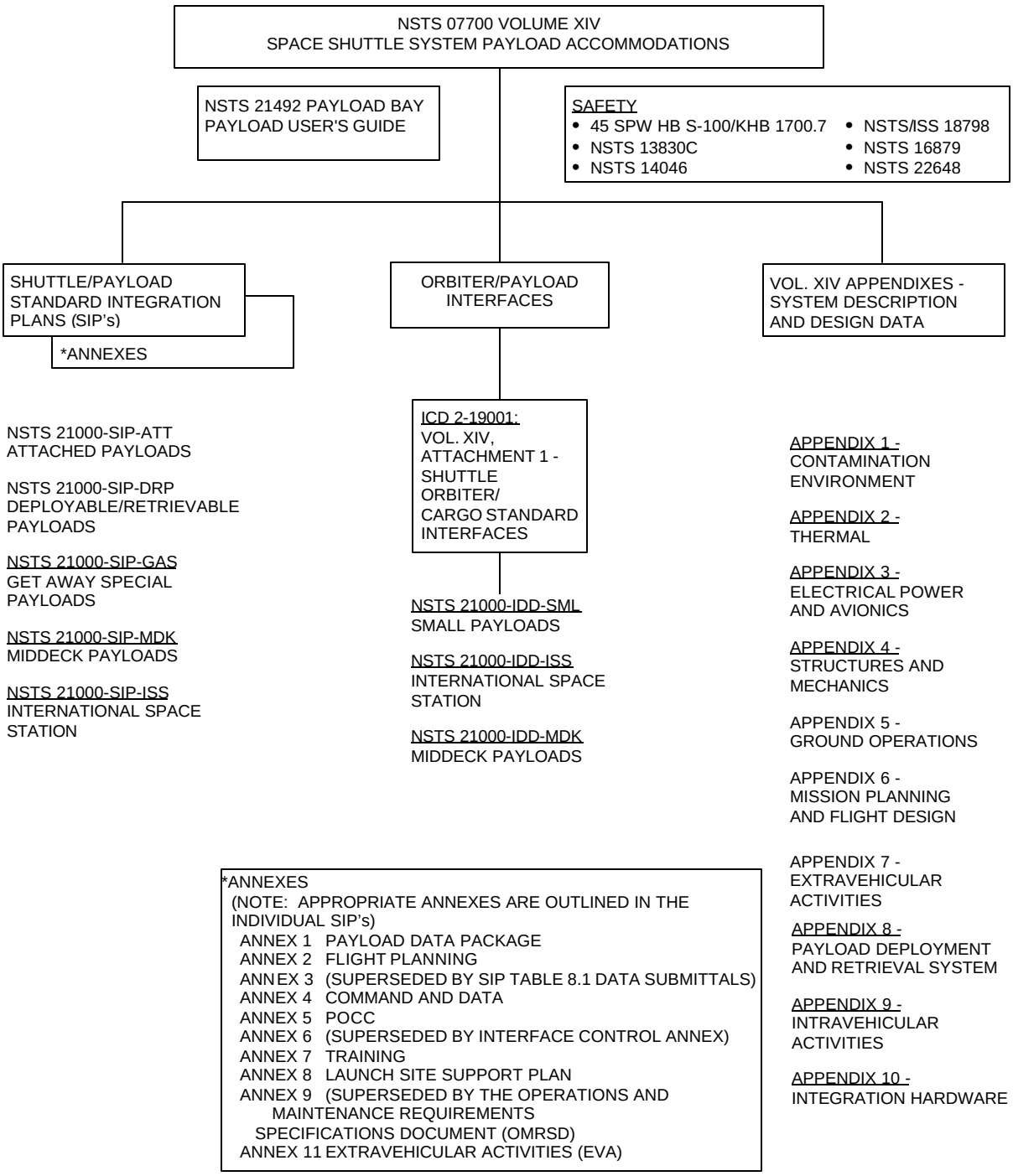

Figure 1.- NSTS customer documentation tree.T

Table of Contents

Part I
EVA Provisions, Capabilities, and Constraints

1 - Introduction I.1-1

1.1 Categories of EVA I.1-1

2 - Standard SSP EVA Provisions I.2-1

2.1 Extravehicular Mobility Unit (EMU) I.2-1
2.2 Ancillary EMU Hardware I.2-4

3 - Nonstandard SSP EVA Provisions I.3-1

3.1 Manipulator Foot Restraint (MFR) I.3-1
3.2 EVA Tools I.3-1
3.3 Tool Stowage Options I.3-1

4 - Orbiter EVA Provisions I.4-1

4.1 Crew Compartment I.4-1
4.2 Airlock I.4-1
4.3 Payload Bay I.4-1
4.4 EVA Voice Communications I.4-8

5 - Factors Affecting Employment of EVA I.5-1

5.1 Environmental Factors I.5-1
5.2 Spacesuit Factors I.5-2
5.3 Task Design I.5-8

6 - EVA Mission Integration I.6-1

6.1 EVA Development Responsibilities I.6-1
6.2 Sequence of Activities I.6-3

PART II
EVA Design Requirements

1 - Introduction and Definitions II.1-1

2 - Design Requirements and Constraints II.2-1

2.1 Airlock to Payload Access Corridor II.2-2
2.2 Translation Aids to Worksites II.2-3
2.3 Crew and Equipment Safety II.2-7
2.4 Cargo Transfer Requirements II.2-7
2.5 Restraint Provisions at Worksites II.2-12
2.6 Visibility and Lighting Requirements II.2-16
2.7 Working Volume Requirements II.2-17
2.8 Glove Interface II.2-19
2.9 EVA Tool Design II.2-19
2.10 Knobs, Switches, Actuators, and Fasteners II.2-21
2.11 Access Doors and Panels II.2-22

3 - Acronyms and Abbreviations II.3-1

4 - Bibliography II.4-1

Tables

I.4-I EMU AND ORBITER FREQUENCIES I.4-9
II.2-I HANDHOLD AND HANDRAIL GENERAL DESIGN CHARACTERISTICS II.2-5
II.2-IIa EDGE, CORNER, AND PROTRUSION CRITERIA- EDGE AND IN-PLANE CORNER RADII II.2-8
II.2-IIb EDGE, CORNER, AND PROTRUSION CRITERIA - PROTRUSIONS AND OUTSIDE CORNERS II.2-9
II.2-III EVA FOOT RESTRAINT GENERAL SPECIFICATIONS II.2-12

Figures

Part I

I.2-1	Shuttle EMU	I.2-1
I.2-2	Major EMU components	I.2-2
I.2-3	EMU battery	I.2-3
I.2-4	Contaminant Control Cartridge (CCC)	I.2-3
I.2-5	EMU tethers	I.2-4
I.2-6	Extended range safety tether (35-foot safety tether)	I.2-5
I.2-7	The mini workstation	I.2-5
I.2-8	EMU lights	I.2-5
I.2-9	Cuff checklist	I.2-6
I.4-1	Orbiter airlock	I.4-2
I.4-2	Internal airlock	I.4-3
I.4-3	D-shaped hatch basic configuration and hatch cover features	I.4-4
I.4-4	Payload bay configured for scheduled EVA	I.4-5
I.4-5	Port and starboard EVA slidewire	I.4-6
I.4-6	EVA translation	I.4-7
I.4-7	Astronaut in PFR	I.4-8
I.4-8	Aft bulkhead EVA winch	I.4-8
I.4-9	EVA communications	I.4-10
I.5-1	EVA training in zero-g aircraft	I.5-1
I.5-2	Optimum two-handed EVA work envelope	I.5-3
I.5-3	Maximum side reach envelope	I.5-4
I.5-4	Maximum forward reach envelope	I.5-5
I.5-5	EMU glove and watch	I.5-6
I.5-6	EMU helmet field-of-view	I.5-7
I.6-1	Crew training flow diagram	I.6-3
I.6-2	EVA mission integration	I.6-4

Part II

II.2-1	Envelope for handrail-assisted translation	II.2-3
II.2-2	Reserved EVA envelope	II.2-3
II.2-3	Shuttle payload bay handrail locations	II.2-4
II.2-4	Handhold/handrail example	II.2-6
II.2-5	Exposed corner and edge requirements	II.2-10
II.2-6	Powered extendable boom cargo transfer concept	II.2-10
II.2-7	Clothesline cargo transfer concept	II.2-11
II.2-8a	PFR location example	II.2-13
II.2-8b	PFR location example (continued)	II.2-14
II.2-9	Tool bag with tether hooks	II.2-14
II.2-10	Tether point requirements	II.2-14
II.2-11a	Shuttle large and small tether hook dimensions	II.2-15
II.2-11b	Payload retention, PRD, hook (French hook)	II.2-15
II.2-12	Work station used in LEASAT salvage mission	II.2-16
II.2-13	Recommended working volume for manipulative EVA tasks	II.2-17
II.2-14	SSP EMU dimensions	II.2-18
II.2-15	Work envelope for gloved hand	II.2-19
II.2-16	Recommended EVA tool grip dimensions	II.2-20
II.2-17	Connector examples (a-c) and connector spacing requirement (d)	II.2-22
II.2-18	EVA pip pin and EVA bolt heads	II.2-23

PART I

EVA Provisions, Capabilities, and Constraints

Introduction

1

The Space Shuttle Program (SSP) operational era offers numerous services to payloads in addition to providing transportation to and from orbit and supplying an orbital operations platform. One such service is the capability to conduct extravehicular activity (EVA) for both payload and Orbiter operations.

EVA includes all activities performed external to the Orbiter cabin by crewmembers in their extravehicular mobility units (EMU's).

1.1 Categories of EVA

There are three basic classes of EVA:

Scheduled EVA	-	EVA planned and included in the nominal mission timeline.
Unscheduled EVA	-	EVA planned but not included in the nominal scheduled mission activities but which may be required to achieve payload operation success.
Contingency EVA	-	EVA required to effect the safe return of the Orbiter and crew.

The following tasks are selected to represent the wide range of EVA applications for payload support.

- Providing backup capability to raise, lower, or jettison a satellite or experiment
- Capture of an on-orbit satellite and berthing it to the Orbiter
- On-orbit satellite repair and servicing
- Structural assembly techniques
- Inspection and photography of payloads
- Installation, removal, and transfer of film cassettes, material samples, and instrumentation
- Operation of equipment, including standard or special tools, cameras, and cleaning devices
- Connection, disconnection, and stowage of fluid and electrical umbilicals when safed
- Replacement and inspection of modular equipment and instrumentation on the payload or spacecraft
- Remedial repair and repositioning of antennas, solar arrays, experiment covers and mechanisms
- Conducting experiments
- Transfer of cargo

Additional details may be found in the appropriate Integration Plan (IP) Annex 11.

Standard SSP EVA Provisions

2

Shuttle EVA provisions and some basic carry-on equipment required for EVA are baselined for each Shuttle mission. This standard SSP accommodation satisfies program requirements to provide one, two-crewmember EVA on every flight for Orbiter contingencies. For payload activities, consumables and expendables can be provided for a maximum of five two-crewmember EVA's, with a duration of six hours per EVA.

To accomplish these standard services, each flight crew is trained to use the standard hardware described in sections 2.1 and 2.2.

2.1 Extravehicular Mobility Unit (EMU)

The EMU (Figure I.2-1) is an independent anthropomorphic system that provides environmental protection, mobility, life support, and communications for the Shuttle crewmember to perform EVA in Earth orbit. Two EMU's are included in each Orbiter mission.

The EMU consists of a Space Suit Assembly (SSA) that includes the basic pressure-restraint and thermal micrometeoroid garment components, a Primary Life Support Subsystem (PLSS), a Secondary Oxygen Pack (SOP) for emergency use, an Ultrahigh-Frequency (UHF) radio communication system, and the displays and controls required to operate these EMU components (Figure I.2-2). The EMU battery

Figure I.2-1.- Shuttle EMU.

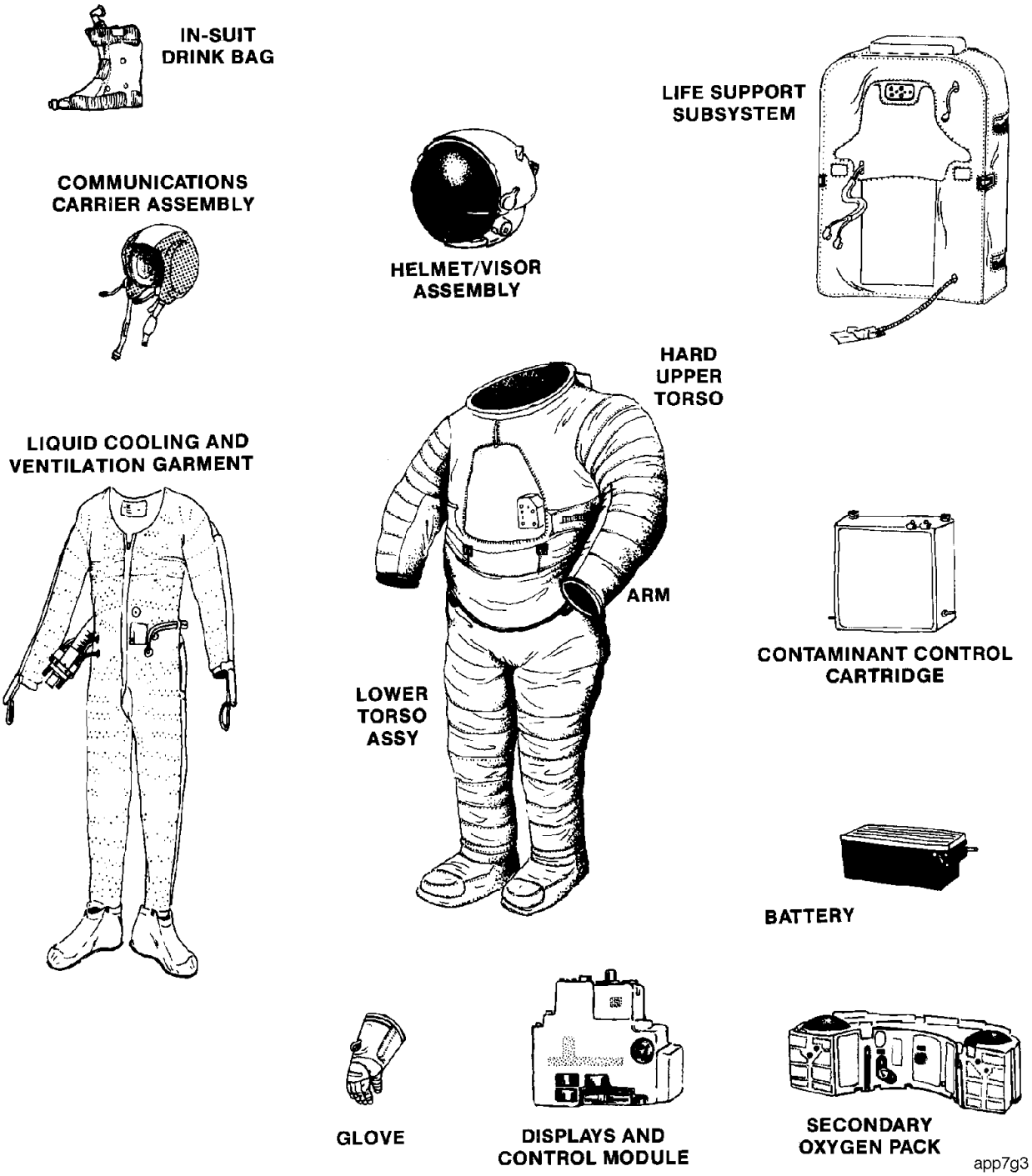

Figure I.2-2.- Major EMU components.

(Figure I.2-3) is the power supply for all of the electrical and electronic components of the EMU. Additional EMU batteries can be used to power the EVA Glover Heaters. The EMU Contaminant Control Cartridge (CCC) (Figure I.2-4) uses lithium hydroxide (LiOH) to remove carbon dioxide (CO_2) from suit ventilation flow. One canister per EMU per 6-hour EVA is required. The weight of the charged EMU in EVA configuration is approximately 280 pounds (127.3 kg).

Figure I.2-3.- EMU battery.

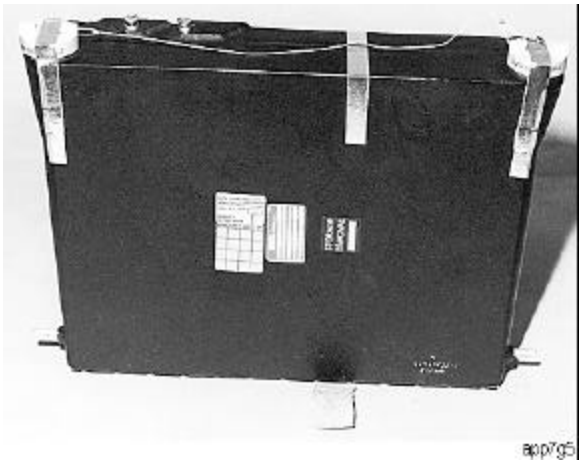

Figure I.2-4.- Contaminant Control Cartridge (CCC).

Though similar in design and capabilities to those used during Apollo and Skylab, the Shuttle EMU emphasizes improved reliability with minimum maintenance and pre-EVA checkout requirements.

Customized suit fitting requirements have been reduced through the use of standard-sized components that combine with interchangeable sizing elements to fit a full range of crewmembers.

The EMU is designed to accommodate an EVA with the following characteristics:

- Total duration of 7 hours maximum, consisting of 15 minutes for egress, 6 hours for useful EVA tasks, 15 minutes for ingress, and a 30-minute reserve
- An average metabolic rate not exceeding 1600 Btu/hour (0.469 kw) in any given EVA hour and not exceeding 1000 Btu/hour (0.293 kw) for the entire duration
- A peak metabolic rate not exceeding 2000 Btu/hour (0.586 kw) for a period of 15 minutes
- A minimum metabolic rate not less than 400 Btu/hour (0.117 kw) for a period of 30 minutes

Actual use rates of oxygen, water, and LiOH are functions of each crewmember's metabolic rate, which, in turn, depends on his workload and other physiological factors. Consumption of electrical power is relatively constant. When proper consideration is given to workload planning, crewmember restraint at the worksite, and adequate crew training, there is little probability of exceeding the capacity of the Shuttle EMU during a 6-hour EVA.

The backup life support provided by the SOP consists of open-loop ventilation at a reduced suit pressure and is limited to 30 minutes. Unlike the PLSS, the SOP cannot be reserviced on orbit.

The EMU caution and warning system monitors system operating mode, environmental parameters, consumables status, and fault detection. The crewmember can display suit parameters and consumables status at any time. For additional information on the EMU refer to EMU Systems Training Manual, JSC 19450.

2.2 Ancillary EMU Hardware

Several items of ancillary equipment complement the pressure-suited crewmember's capabilities.

Tethers

Two 24-inch (0.60-m) waist safety tethers and one 14-inch (0.36-m) wrist equipment tether on each EMU (Figure I.2-5) provide tethering of the crewmember and EVA equipment. Tether hooks are designed to facilitate one-handed pressurized-glove operation and to preclude inadvertent release. A self-retracting 35-foot (10.7-m) safety tether attached to a slidewire allows crewmember translation along the length of the payload bay (refer to Figure I.2-6).

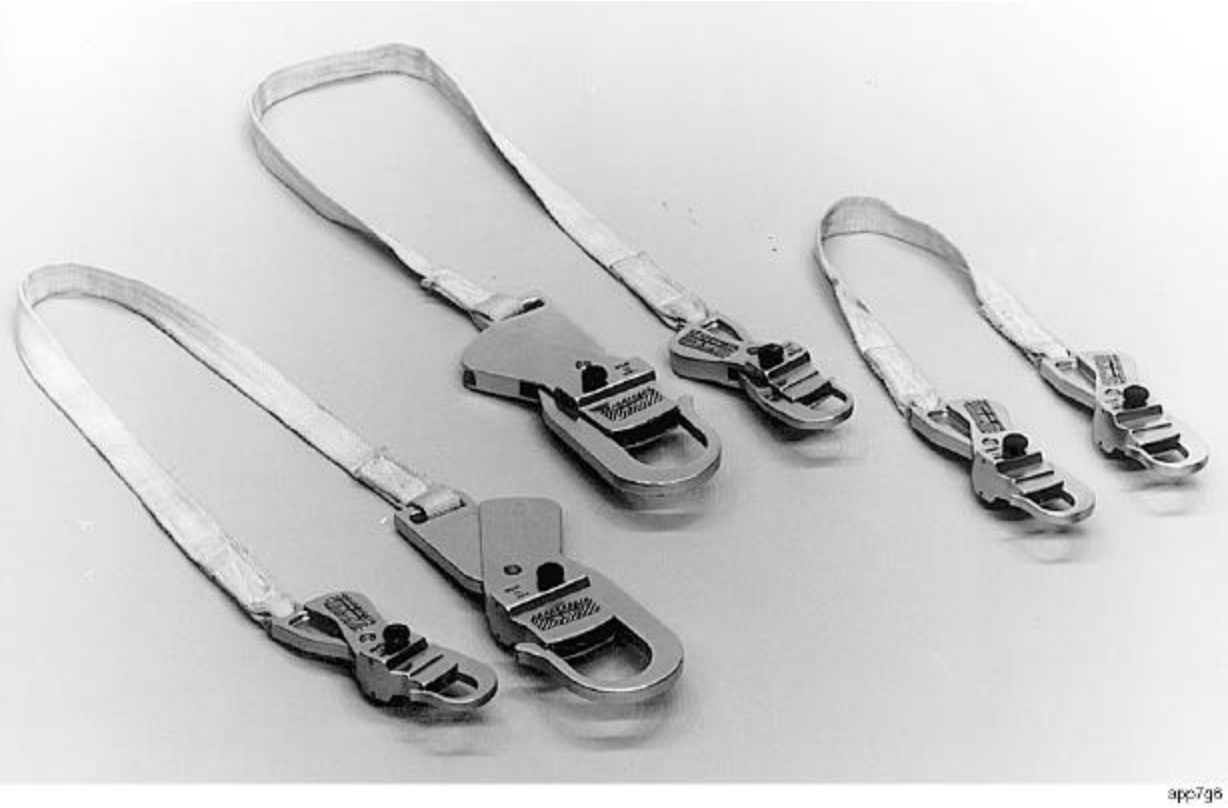

Figure I.2-5.- EMU tethers.

Figure I.2-6.- Extended range safety tether (35-foot safety tether).

Mini Workstation (MWS)

This mechanical device (Figure I.2-7) mounts on the front of the EMU and provides temporary stowage of EVA tools; it has a work tether for additional crew restraint at a worksite. Individual tools are tethered to interchangeable caddies by 3-foot or 6-foot (0.91 or 1.8 m) self-retracting tethers.

Helmet-Mounted Lights

A self-contained light system providing a minimum of 10 footcandles (108 lux) at 2 feet (0.6 m) is mounted on the helmet for worksite illumination (Figure I.2-8). The lights are position adjustable and from zero to four lights may be selected.

Figure I.2-7.- The mini workstation.

Figure I.2-8.- EMU lights.

Cuff Checklist

The cuff checklist (Figure I.2-9) provides EVA procedures and reference data and may be customized by adding payload-specific pages.

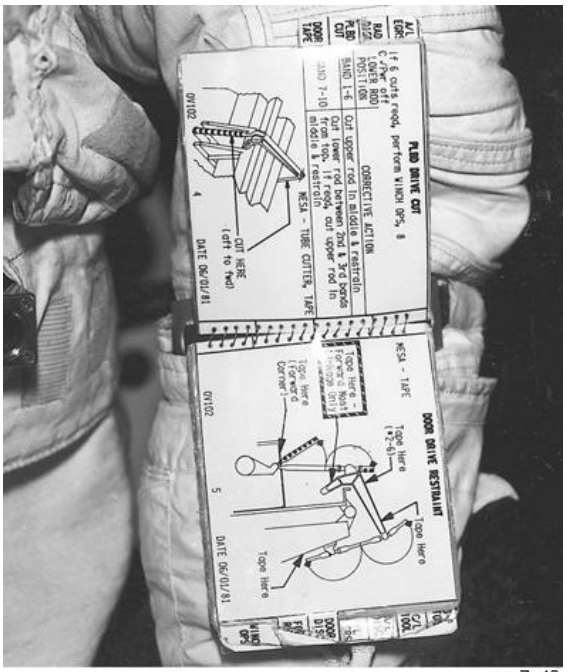

app7g10

Figure I.2-9.- Cuff checklist.

Nonstandard SSP EVA Provisions

3

Various types of EVA equipment have already been developed by the SSP to provide a wide range of EVA capabilities but are not normally carried on each flight. Although most items of equipment were developed to satisfy specific needs, the full range of applications has yet to be determined.

The customer may request, in the Integration Plan (IP), items not normally baselined for a mission. These items would be payload chargeable based on their weight and/or volume. In the interest of minimizing cost, standardization, and simplified crew training, customers should use the existing tool inventory to satisfy their requirements since it greatly simplifies tool stowage and mission integration. A more detailed description of Space Shuttle Program EVA hardware is provided in EVA Catalog Tools and Equipment, JSC 20466.

3.1 Manipulator Foot Restraint (MFR)

The MFR is attached to the Remote Manipulator System (RMS) end effector and provides restrained access to EVA worksites within the operational reach of the RMS and MFR. As a portable work station, the MFR provides for tool stowage and transfer of hardware from stowage sites to worksites.

3.2 EVA Tools

Many EVA tasks on previous space missions have been accomplished using off-the-shelf industrial or consumer tools with modifications to enhance thermal performance or handling/gripping or tethering. EVA experience shows a properly restrained crewmember can perform the same manipulative operations on orbit that can be performed on Earth. Therefore, given adequate interface designs (i.e., payloads designed for EVA servicing), a moderate complement of hand tools may satisfy payload servicing requirements. If special tools are required, the user can develop mission specific EVA tools. However, these tools must meet SSP requirements and the design of EVA tools should closely follow the design criteria in Part II. Previously developed and certified tools are shown in EVA Catalog Tools and Equipment, JSC 20466.

3.3 Tool Stowage Options

Orbiter EVA tools are stowed in the Provisions Stowage Assembly (PSA) and the Tool Stowage Assembly (TSA). The Provision Stowage Assembly (PSA) consists of a pair of tool boxes mounted in the bottom forward end of the payload bay for tool and equipment stowage. The starboard TSA can be flown to provide additional stowage space. The port TSA contains the standard tools and equipment necessary to support Orbiter EVA tasks. Limited space is available to stow payload unique EVA support equipment. The stowage, weight, and volume will be agreed to by the customer and the SSP in the integration process. For additional information on EVA tools, refer to EVA Catalog Tools and Equipment, JSC 20466.

Orbiter EVA Provisions

4

4.1 Crew Compartment

Aft Flight Deck (AFD)

The AFD is where crewmembers in the crew compartment visually observe EVA activities. Observation can either be by looking out the AFD windows or by video monitors at the AFD. In addition, the RMS is operated from the AFD.

Middeck

Stowage lockers located in the middeck crew compartment hold most of the loose equipment required for EMU use and servicing. Special stowage accommodations for flight-specific EVA accessories may be provided when space, weight, and center of gravity (CG) permit. Refer to Shuttle/Payload Interface Definition Document for Middeck Payload Accommodations, NSTS 21000-IDD-MDK.

4.2 Airlock

The Orbiter airlocks (Figure I.4-1) provide the means for the suited EVA crewmember to perform an EVA egress without depressurizing the entire crew compartment. Additionally, the internal airlock provides launch and entry stowage of EMU's and has the interfaces and associated displays and controls for the Orbiter systems to support two EMU operations and servicing . The internal airlock is a cylinder 63 inches (1.6 m) in diameter and 83 inches (2.1 m) high with two 39.4-inch (1.0-m) diameter D-shaped openings with pressure-sealing hatches. The airlock location is inside the middeck crew compartment attached to the X_o 576 bulkhead (Figure I.4-2). The external airlock is 63 inches (1.6 m) in diameter and 83 inches (2.1 m) high with three openings (upper hatch is the third one).

Tunnel Adapter

The tunnel adapter is provided as a mission kit for flights which contain a habitable payload and do not have a docking requirement. The tunnel adapter is attached to the X_o 576 bulkhead and is located in the payload bay. It is used in conjunction with the airlock to provide shirt-sleeve access between the Orbiter cabin and the habitable payload. The interface between the adapter and the habitable payload is to be provided as part of the transfer tunnel flight kit and will be bolted directly to the tunnel adapter. Transferable package size limits for suited and unsuited operations through the tunnel are the same as those for the airlock.

Hatches for Airlock and Tunnel Adapter

The airlock and tunnel adapter hatches conform to Figure I.4-3 which standardizes hatch opening size. The hatches have six equally-spaced latches, a gear box and actuator, and two pressure equalization valves and hatch opening handles, one set on each side. There are two pressure seals on the hatch side of the structural interface, one on the hatch cover and one on the structural interface. In addition, there are differential pressure gauges and relief valves provided for each hatch. EVA egress routes vary with tunnel configuration.

4.3 Payload Bay

The payload bay is a nonpressurized cylindrical volume, 15 feet (4.6 m) in diameter and 60 feet (18.3 m) long, extending from the forward bulkhead (X_o576) to the aft bulkhead (X_o1307). Handrails are installed on both the fore and aft bulkheads (X_o576 and X_o1307) and along both payload bay door hingelines to provide

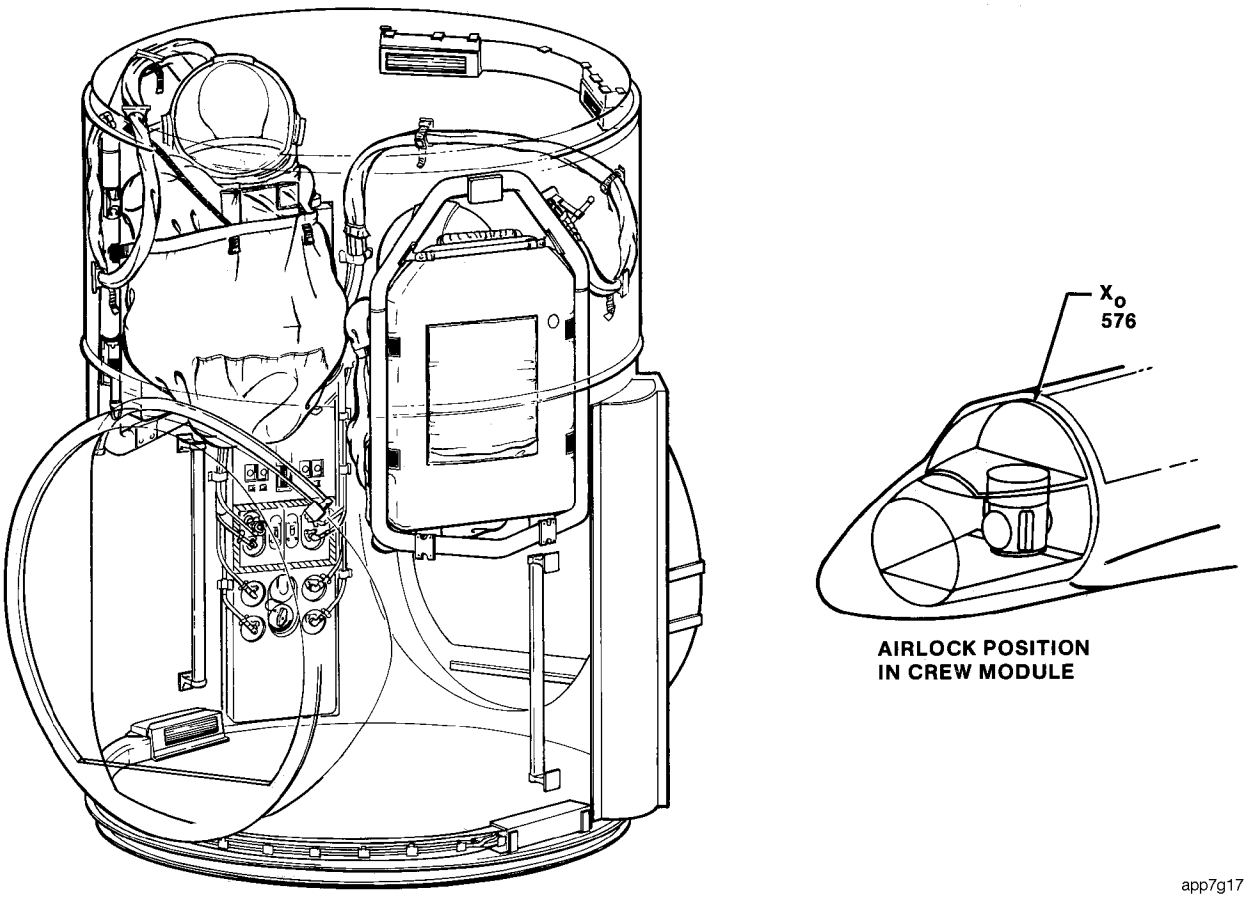

Figure I.4-1.- Orbiter airlock.

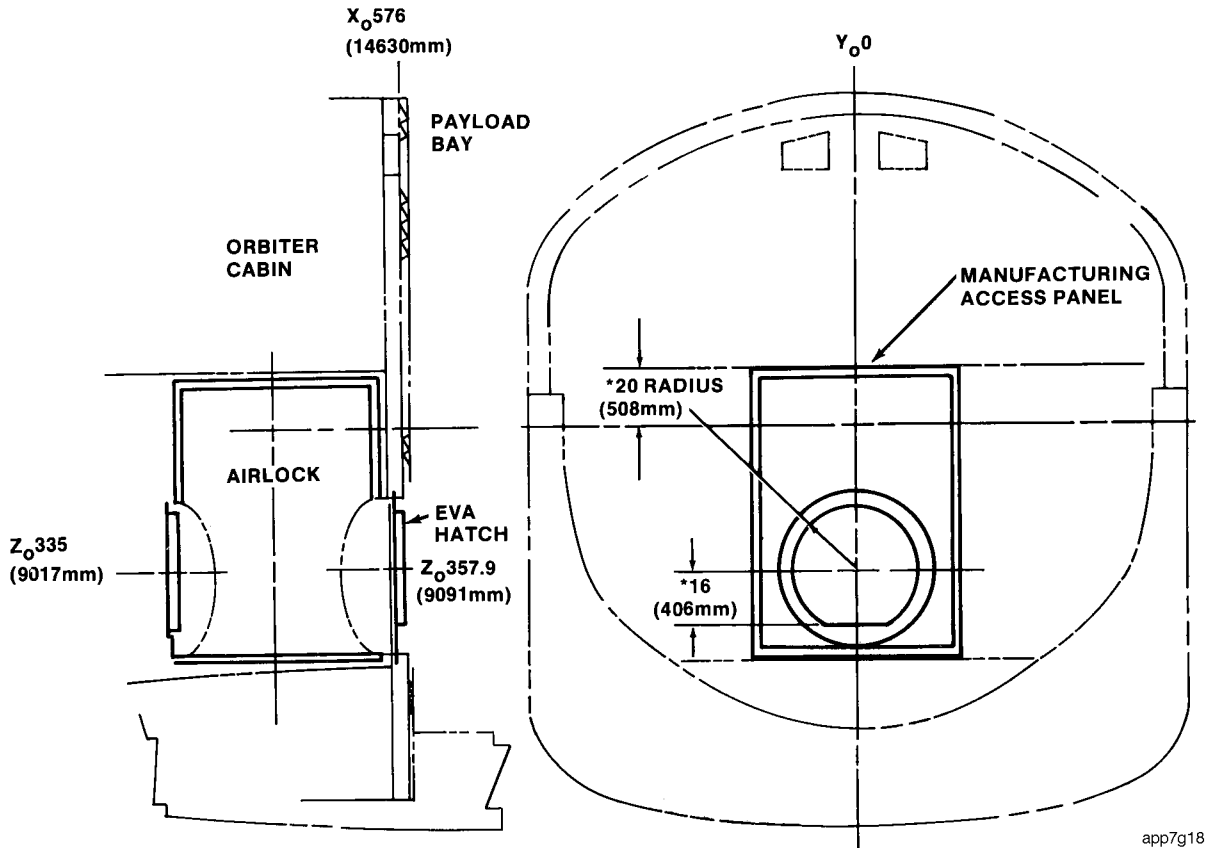

Figure I.4-2.- Internal airlock.

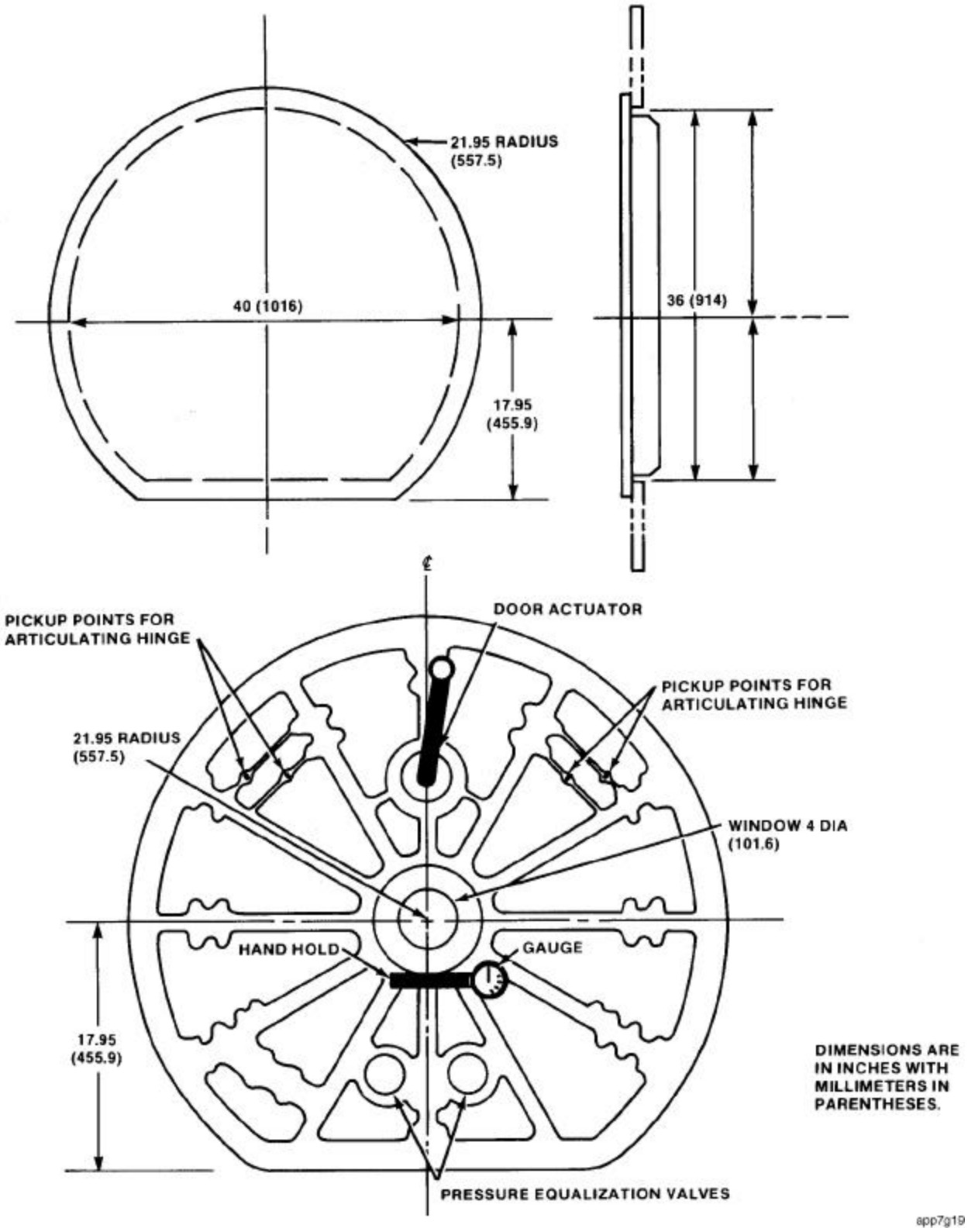

Figure I.4-3.- D-shaped hatch basic configuration and hatch cover features.

crewmember translation routes about the payload bay (Figure I.4-4). The handrails are designed to withstand a maximum crew-induced load of 187 pounds (0.84 kN) in any direction; the safety tether attachment points are designed for a load of 574 pounds (2.6 kN). Retractable safety tethers and slidewires are provided on each side of the payload bay to allow crewmember translation (Figures I.4-5 and I.4-6).

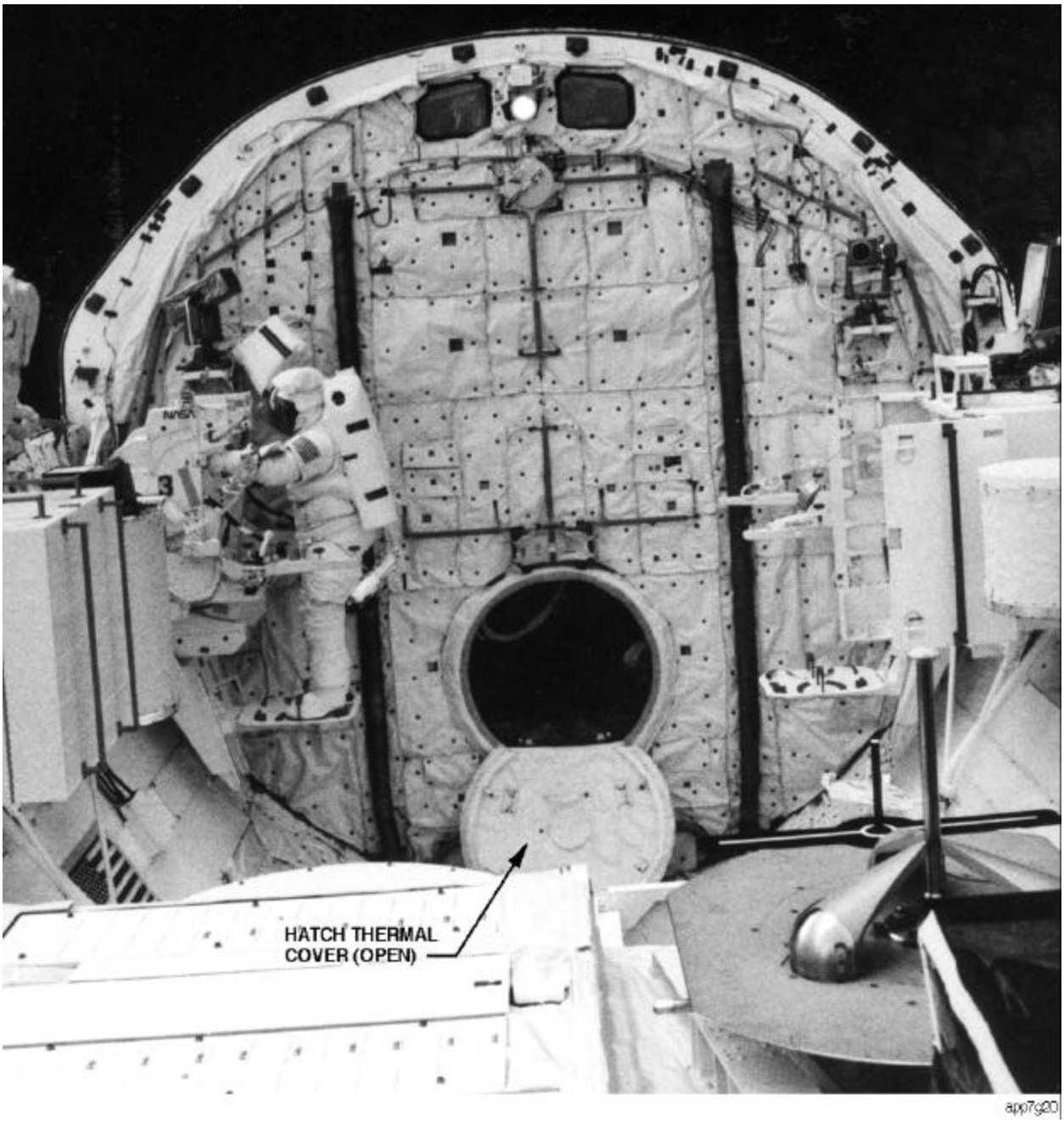

Figure I.4-4.- Payload bay configured for scheduled EVA.

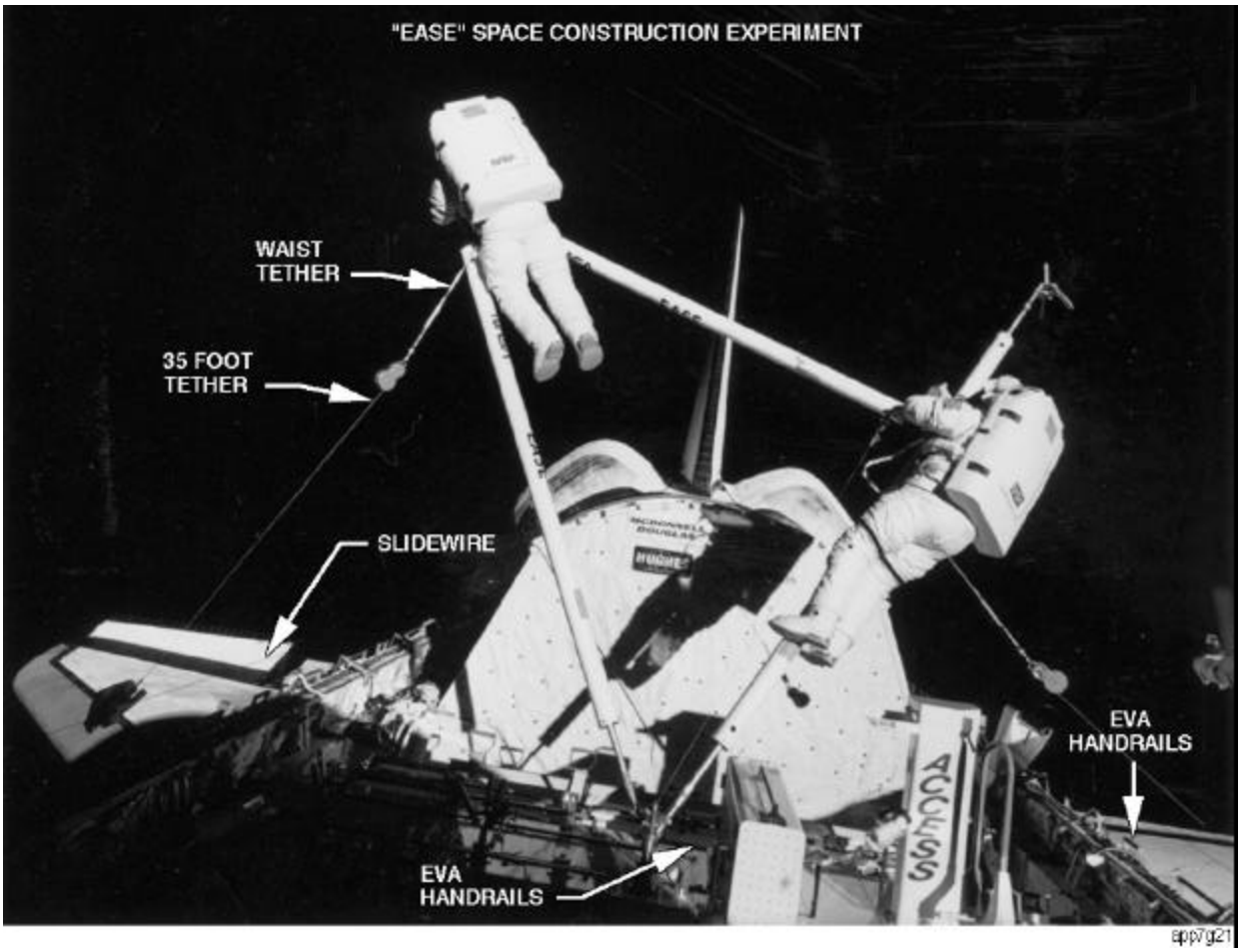

Figure I.4-5.- Port and starboard EVA slidewire.

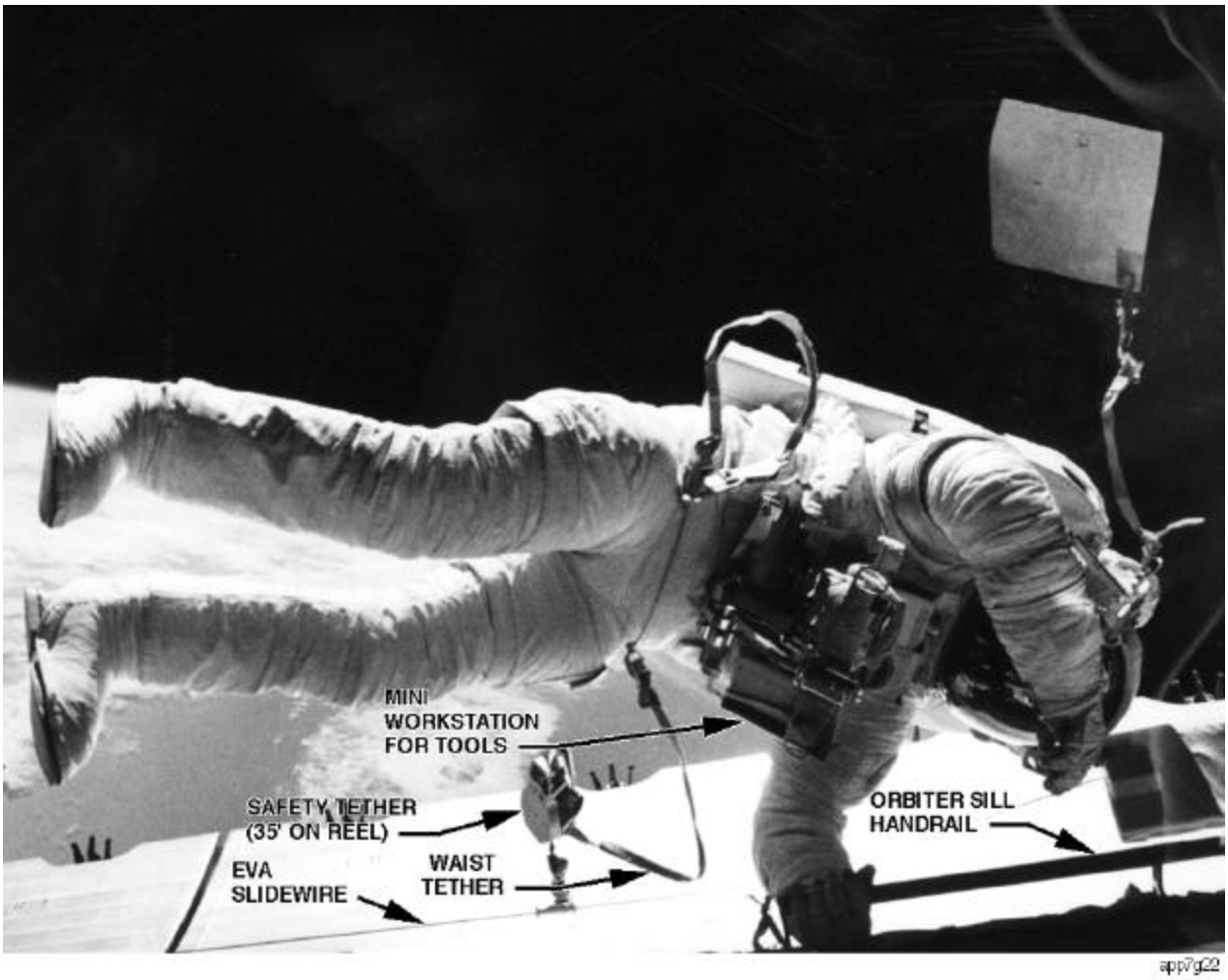

Figure I.4-6.- EVA translation.

Floodlights

The seven payload bay floodlights enhance crew visibility during door operations, payload operations, and EVA. The metal halide-type floodlights provide a minimum 5-footcandle (54-lux) illumination at the payload bay centerline. The forward bulkhead light provides the same level at 30 feet (9.1 m). There are some restrictions to activity near these lights because of heat generation. Some floodlights may be blocked by payloads.

Closed Circuit Television (CCTV)

Up to four payload bay CCTV cameras (not including the two RMS cameras) can support inspection of EVA task areas and allow the intravehicular (IV) crewmembers to observe and verify EVA operations, accuracy of techniques applied, and satisfactory task completion. Pan, tilt, zoom, focus, and aperture control of the cameras are remotely controlled from the crew module or via ground commands. There is a wide selection of CCTV lenses to fit most payload requirements. For more information on the CCTV system, refer to the current issue of the Shuttle Flight Operations Manual (SFOM), Vol. 4D.

Payload Deployment and Retrieval System (PDRS)

The PDRS provides the capability for deployment and retrieval of payloads equipped with a compatible grapple fixture. The RMS, the “arm” employed with the PDRS, can also be used for EVA support, performing tasks such as satellite

positioning or EVA crewmember positioning using an attached MFR. Although the PDRS is a standard Orbiter provision, it is not always manifested and must be requested by the customer.

There are two television cameras on the RMS, one at the elbow and the other at the wrist. The RMS television cameras and the light located near the end effector may be used to enhance EVA capabilities. For more particulars on the PDRS, consult System Description and Design Data - Payload Deployment and Retrieval System, NSTS 07700 Vol. XIV, Appendix 8.

Portable Foot Restraint (PFR)

A PFR provides restraint to the EVA crewmember accomplishing payload bay tasks. It consists of a foot restraint platform with positioning adjustment capabilities, an extension arm and a foot restraint socket, which locks the extension arm (Refer to Figure I.4-7).

Figure I.4-7.- Astronaut in PFR.

Tool Stowage

Winch

There are two manually operated winches in the payload bay, one mounted on each bulkhead (Figure I.4-8). The winches were developed to assist in closing the payload bay doors in the event of door drive failure. The winch line is a 24-foot (7.3-m) Kevlar rope with a hook attached to the free end. The crew is visually notified of a 580-pound load by a torque “break-over” indication incorporated in the winch handle. The 580-pound (2.6-kN) limit is the practical operational limit of the system.

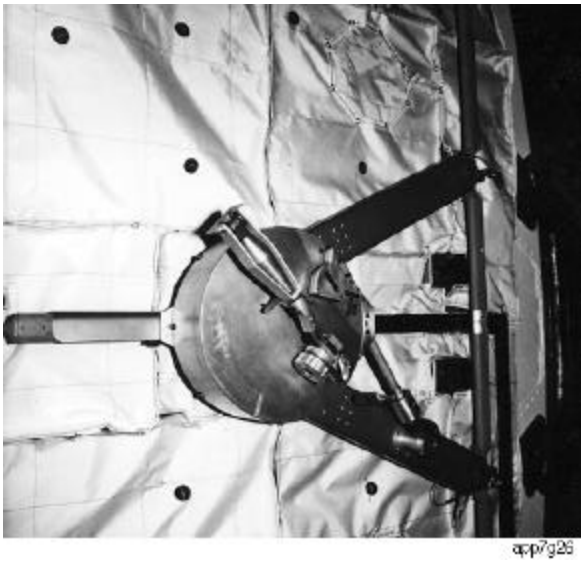

Figure I.4-8.- Aft bulkhead EVA winch.

4.4 EVA Voice Communications

Nominal communications between the Orbiter and two EVA crewmembers is by two-way UHF contact using three separate frequencies. In its EVA mode of operation, the Orbiter’s UHF communications system provides automatic relay to the EVA crewmember of the S-band or Ku-band voice transmissions from the ground stations or Tracking and Data Relay Satellite System (TDRSS). S-band downlink of the EVA crewmember’s voice to the Orbiter is also available, providing two-way voice communication

with the ground. With the full deployment of the TDRSS, coverage via S-band or Ku-band will be available as much as 90 percent of the on-orbit time (Figure I.4-9).

Direct two-way voice communication among the IV crew, the EVA crew, and the Mission Control Center at JSC may contribute to the success of any EVA task, but EVA tasks should not be dependent on ground communications.

The effectiveness of EVA voice communications depends on crewmember location. The Orbiter's transmission power is 0.25 watt in the EVA mode - the same as that of the EMU. The effective maximum range for EVA communication varies from 200 feet (70 m) to 5 nautical miles (9 km) depending on the location of the EMU with respect to the Orbiter antennas and on possible blockage from payload structures.

Payloads which generate RF signals should be designed to prevent interference with the EVA voice communications. Table I.4-I lists the various modes and UHF frequencies in which the EMU and Orbiter can be operated.

TABLE I.4-I.- EMU AND ORBITER FREQUENCIES

	MODE	TRANSMIT FREQ. MHZ	RECEIVE FREQ. MHZ
EMU	A	259.7	279.0, 296.8
	B	279.0	259.7, 296.8
	BU	259.7	259.7, 296.8
ORBITER	EVA	296.8 259.7	259.7, 279.0, 296.8 259.7, 296.8
	SPLX	296.8 259.7	296.8 259.7

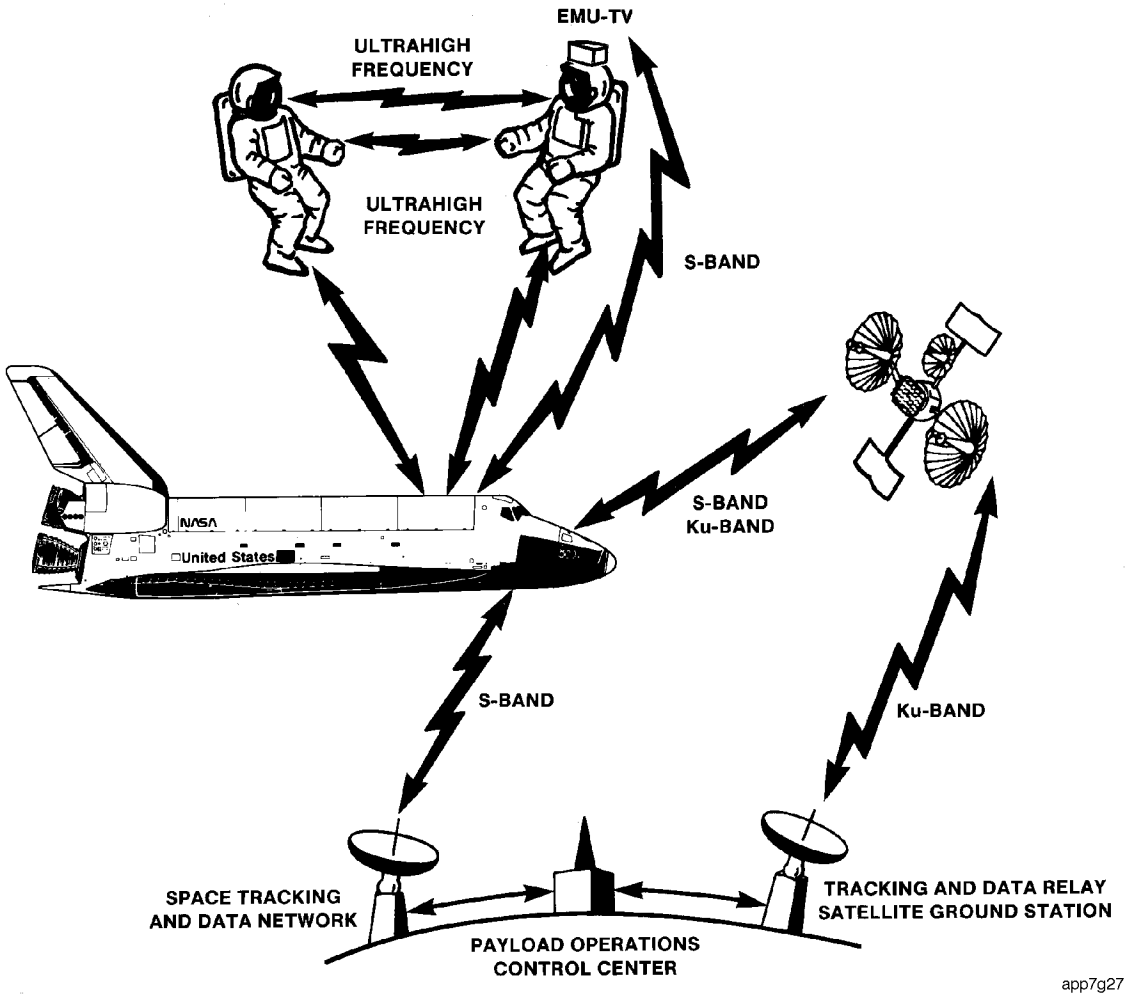

Figure I.4-9.- EVA communications.

Factors Affecting Employment of EVA

5

Each stage in the development of EVA capabilities within the Shuttle Program has been marked by improved system design through incorporation of technological advancements, improved simulation and training, and lessons learned from the preceding efforts. However, a combination of factors, explained in the succeeding paragraphs, has resulted in the development of a conservative flight rule which precludes a scheduled EVA prior to flight day 4 (approximately 72 hours Mission Elapsed Time (MET)) unless: 1) a specific flight is dedicated to scheduled EVA(s) activity, (2) a payload customer has specifically negotiated with NASA for the early scheduled EVA capability, and (3) an exemption is granted by the Program Requirements Control Board (PRCB).

Figure I.5-1.- EVA training in zero-g aircraft.

5.1 Environmental Factors

Weightlessness

Crewmember capabilities in the EVA environment, relative to Earth-based shirt-sleeve performance, are generally improved for certain manned functions and degraded for others. Three major factors that may degrade EVA performance are EMU encumbrances, insufficient working volume, and inadequate restraints. The microgravity environment allows the crewmember additional latitude during worksite operations, translation, and cargo transfer. Translation is practically effortless where mobility aids are available. Body positioning and orientation allow maximum reach and visibility. Torso and limb movements are partly a function of the crewmember's agility (Figure I.5-1).

Hypoxia and Decompression Sickness

In the near-perfect vacuum of Earth orbit, the SSA pressure garment must maintain a minimum pressure of 3.1 psia (21.7 kPa) to protect the EVA crewmember from hypoxia. The Shuttle EMU operates at 4.3 psia (29.6 kPa) and the Orbiter cabin is normally maintained at 14.7 psia (104.4 kPa).

Because SSP crews are acclimated to a 14.7-psia (104.4-kPa) cabin atmosphere, there is a critical physiological transition to the 4.3-psia (29.6-kPa) oxygen environment of the EMU. If the transition is not performed properly, nitrogen bubbles could form in the EVA crewmember's blood and lead to an incidence of the "bends". Current SSP bends prevention relies on two procedures (prebreathe protocols) to remove excessive inert gases from the body prior to exposure to suit pressure. These protocols differ on the basis of whether a 10.2-psia (71.4-kPa) or a 14.7-psia (104.4-kPa) total cabin pressure is

used. The 10.2 protocol is normally used and will require either 12 hours at 10.2 psia with a 75-minute insuit prebreathe or 24 hours at 10.2 psia with a 40-minute insuit prebreathe. The 14.7 protocol requires 4.0-hour insuit prebreathe. Suit preparation, donning, checkout, airlock depressurization, etc. will take additional time.

EVA Response Time

The prebreathe profiles generally provide the minimum EVA response time. Overhead time for EVA equipment preparation, suit donning, crew sleep periods, and mission specific activities must be added to prebreathe time when planning an EVA. With proper premission coordination, the cabin may be depressurized to 10.2 psia as early as flight day 1 allowing a fairly rapid EVA response on flight day 3. Payload failures which require EVA resolution should be documented in Annex 2 and Annex 11 of the IP. The SSP will generate EVA timelines based on these payload inputs. For more detail see Part II.

Carbon Dioxide (CO_2) Toxicity

Excessive CO_2 in the bloodstream can ultimately lead to serious physical disorders and loss of consciousness. If the EMU stops scrubbing CO_2, a high level of CO_2 will be detected and EVA termination must be initiated.

Fatigue

A rest day should be provided between EVA's to prevent crew fatigue. EVA requires a long mission day because of preparation and prebreathe overhead.

5.2 Spacesuit Factors

Mobility, Reach, and Force Application

The EMU suit components are designed to provide bending and centers of rotation of the mobility joints to closely approximate the natural body joint movements. The EMU includes mobility joints in the shoulder, elbow, wrist, finger, thumb, waist, hip, knee, and ankle areas which allow the crewmember freedom of movement in both the pressurized and unpressurized modes. The total EMU system design permits the crewmember to maintain a microgravity-unique natural body position without excessive force and to perform complex mobility functions.

The EMU requires a force by the crewmember to overcome pressure moment and friction forces inherent in the mobility joints. The joints are designed to maintain neutral stability throughout the full range of motion when pressurized to 4.3 psid (29.6 kPa). The EMU suit-joint neutral stability feature alleviates the requirement to apply a significant counteracting force to maintain a desired position.

Although the torques associated with space suit motion are relatively small, certain repetitive tasks requiring arm, wrist, or hand movements tend to fatigue the EVA crew. Tasks such as the manual removal or replacement of threaded fasteners, continuous force-torque application, and extended gripping functions should be minimized in payloads designed for EVA servicing. If such equipment designs are necessary, power tools to assist the EVA crewmember must be employed.

In evaluating the crewmember reach capability in the EMU, two aspects should be considered: (1) the optimum work envelope of the various sized suited crewmembers (Figure I.5-2), and (2) the reach in all directions of a suited crewmember in a properly restrained position (Figures I.5-3 and I.5-4). Actual EVA tasks should not require an EVA crewmember to approach these reach limits. In the first case, the reach is a function of the anthropometry of the subject. The overall reach envelope of a suited subject, in addition to being dependent on the subject's anthropometric percentile, varies according to the nature of the restraint and the requirement for one- or two-handed operation at the reach limit. The optimum area for one- or two-handed operation is centered about the upper chest and lower face area of the crewmember - a factor to be considered in the positioning of foot restraints.

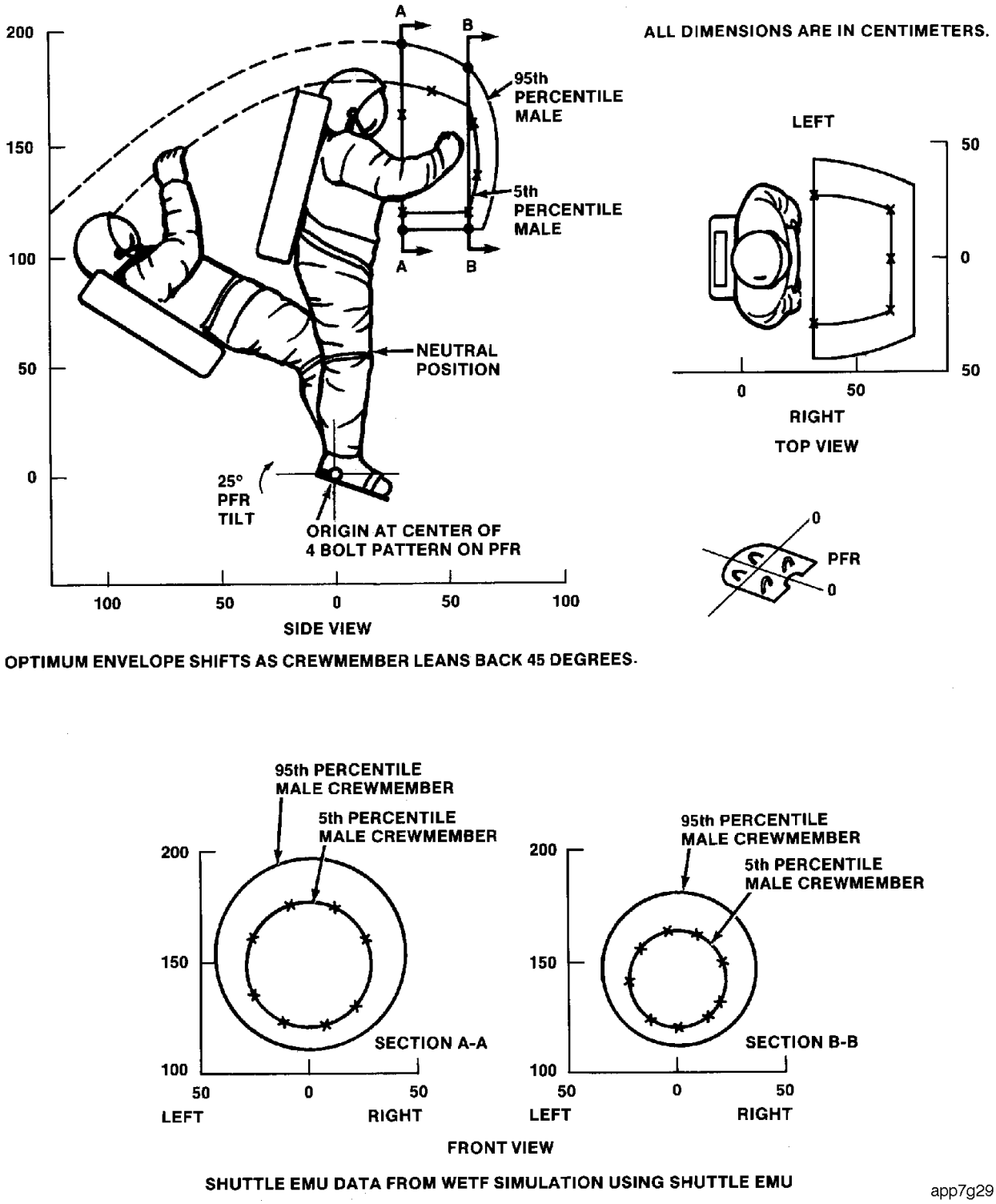

Figure I.5-2.- Optimum two-handed EVA work envelope.

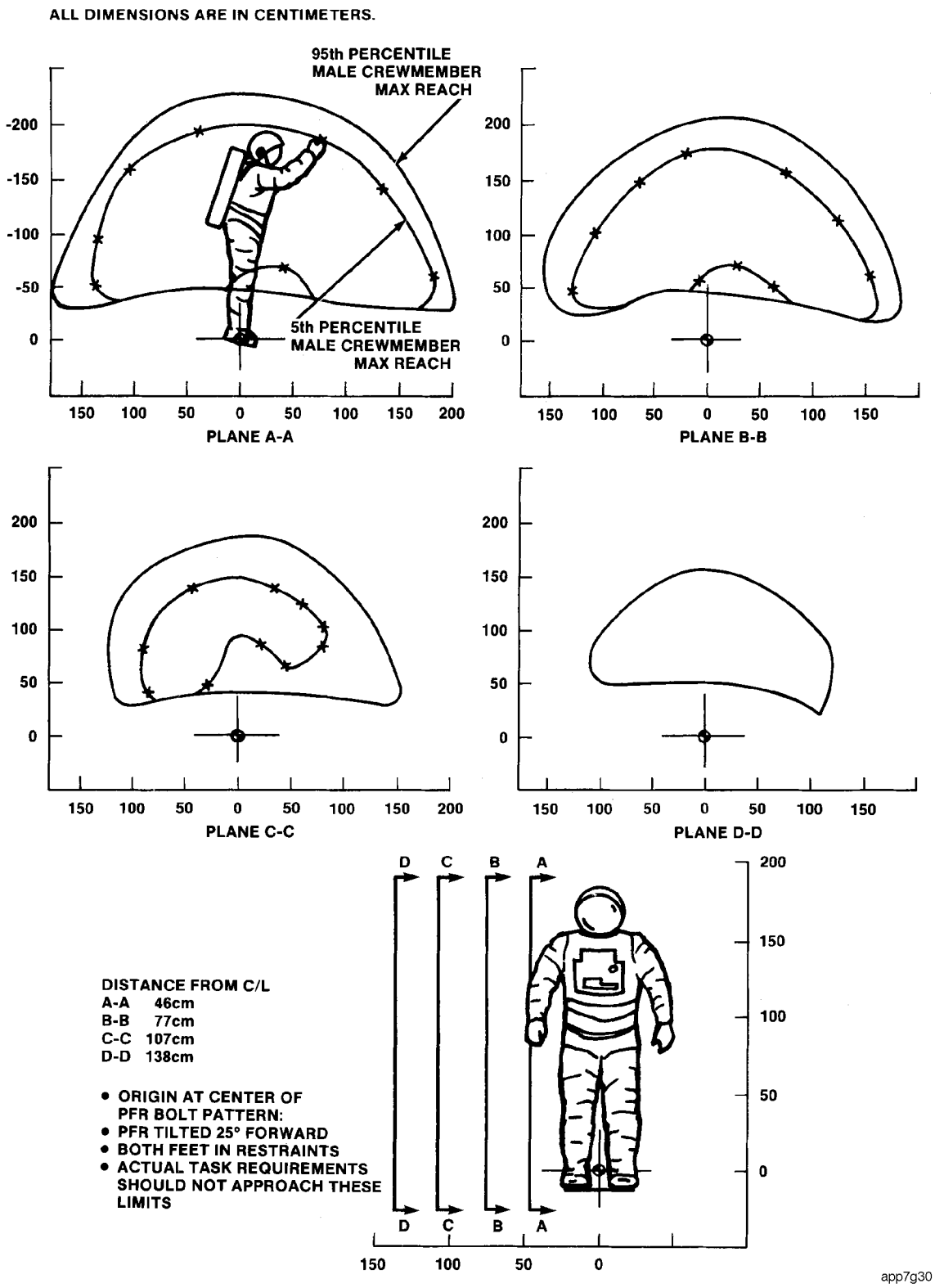

Figure I.5-3.- Maximum side reach envelope.

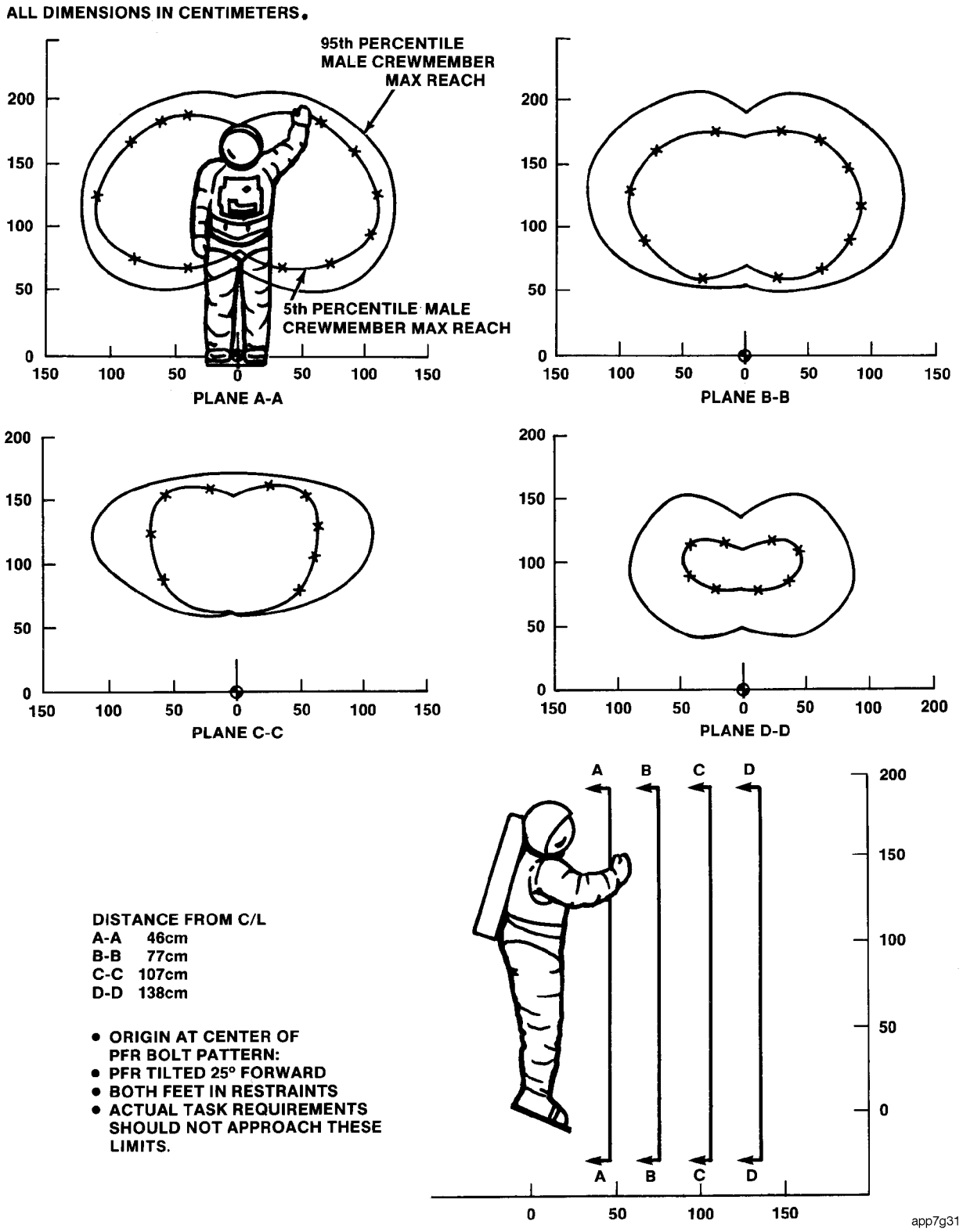

Figure I.5-4.- Maximum forward reach envelope.

Like reach capability, force application must be considered with and without restraints. Analyses have shown the maximum force capability without restraints is a function of the subject's mass and the distance (arm reach) at which force can be applied.

Only low-force, short-time operations such as actuation of toggle and rotary switches, surveillance of controls and displays, and visual inspections can be effectively performed by an unrestrained crewmember in a weightless environment. An unrestrained crewmember can exert high-force impulse-type loads and can apply higher loads using one hand to hold on and one hand to apply the load.

Weightless Environment Training Facility (WETF) testing has produced the following data:

1. The suited subject, in foot restraints only, was able to apply a straight-ahead push force of 45 pounds (200 N) for 3 seconds, 20 pounds (89 N) for approximately 15 seconds, and 10 to 15 pounds (44 to 67 N) almost indefinitely.

2. When a waist tether was attached, a 30-pound (133-N) force was exerted with no difficulty and a 45-pound (200-N) force could be maintained for 1 minute.

Very high loads, similar to shirt-sleeve capability, can be applied perpendicular to the foot restraint. These forces were reduced approximately 30 percent when the point of force application was moved near the top of the subject's reach envelope. Although these data cannot be used to determine detailed specifications, standards, or design requirements, the data do indicate the necessity of providing adequate restraint and proper body orientation to the EVA crewmember to optimize force output. In this regard, foot restraints have proved to be the most effective means of stabilizing the crewmember and maximizing his capabilities.

EVA gloves degrade tactile feedback relative to bare-hand operations (Figure I.5-5). Dexterity can be compared to that of heavy work gloves, but some standard-type handles, knobs, toggle switches, and buttons can be operated with EVA gloves. Considerable attention should be given to the design of manual interfaces to maximize the crewmembers capability and to preclude the early onset of fatigue. The design specifications for glove interfaces are given in Part II of this document.

Where tasks are sensitive to limits on dexterity, interface compatibility can sometimes be verified in ground-based evaluations.

Figure I.5-5.- EMU glove and watch.

EMU Helmet Field-Of-View

The EMU helmet field-of-view corresponds to the normal field of vision with the head and eyes fixed in a normal primary position. This field of vision is shown in Figure I.5-6.

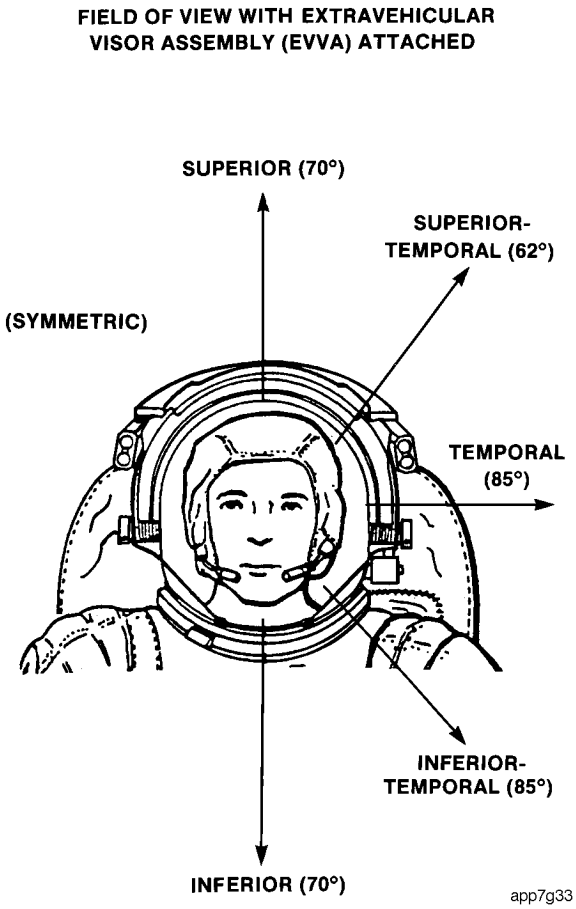

Figure I.5-6.- EMU helmet field-of-view.

Mass and Volume Handling

The capability to maneuver large equipment modules, experiments, and payloads enhances on-orbit EVA payload servicing. Appropriate crew mobility aids, restraints, and cargo design are the key elements in EVA equipment handling. The designer of EVA transportable hardware must consider module size, quantity, geometry, mass transfer distance, time, temporary stowage, number of EVA crewmembers, handholds/grips, and handhold/grasp location relative to the center of mass. On-orbit experience has proven that EVA crewmembers can handle large satellites if proper handholds and foot restraints are provided. However, precise positioning can be a problem since large volumes may also block an EVA crewmember's vision. As an EVA design goal, cargo mass should be limited to 750 pounds (341 kg) and volume limited to "telephone booth" sized structures. An example is a Hubble Space Telescope (HST) orbital replacement unit with a mass of 700 pounds (318.2 kg) and dimensions of 36 inches x 36 inches x 87 inches (0.91 m x 0.91 m x 2.2 m).

Translation Rates

The distance translated and the frequency of translation were not major factors relative to crew EVA timelines in previous orbital space programs. However, the 60-foot (18.3-m) Shuttle Orbiter payload bay requires more accurate planning of EVA crew time. The forces required to handle cargo in a microgravity environment are those induced by the inertial properties of the cargo and the crewmember. Translation rate limits are imposed only within the constraints of transport time, safety (crew and vehicle), control requirements, acceleration limits, vehicle geometry, and positioning accuracy. Crew translation velocity in the vicinity of equipment potentially hazardous to the crewmember, his support equipment, or the Orbiter must be reduced to satisfy both mission and safety requirements.

A nominal translation rate of 0.5 to 1.0 ft/sec (0.16 to 0.33 m/sec) has been observed for the unencumbered Shuttle crewmember. Spacesuited NBL cargo transfer simulations have reported crewmember velocities ranging from 0.3 ft/sec (0.09 m/sec) for 1650 pounds (748 kg) mass transfer to 0.7 ft/sec (0.21 m/sec) for transporting the smaller (<1.0 ft^3 (<0.03 m^3)) modules. For timeline estimations, 0.5 ft/sec (0.16 m/sec) is used.

5.3 Task Design

When considering the design of an EVA task, the customer must take the previously described factors as constraints and the specifications in Part II of this document as minimum requirements. The designer should use the proven hardware in EVA Catalog Tools and Equipment, JSC 20466, to enhance mission-success probability and minimize cost development efforts and crew training requirements. EVA worksites must provide adequate access to mechanisms, sufficient lighting, good crewmember restraints, reasonable force requirements, and hazard avoidance.

Safety

Safety Policy and Requirements for Payloads Using the Space Transportation System (STS), NSTS 1700.7B, current issue, states that a payload or payload airborne support equipment which violates the Orbiter payload bay door closure envelope constitutes a safety hazard. Failure modes include failures of drive mechanisms, electrical failures, and structural failures. The hazard of preventing door closure must be controlled by independent primary and backup methods, and this combination must be two failure tolerant. Payloads may be designed such that EVA may be used to provide the third method to safe the payload and/or to assure mission success.

Complexity

Requirements for EVA are divided into three levels of complexity: simple, intermediate, and complex.

A simple EVA requires no unique tools, mockups, or mobility aids. Existing procedures and techniques may be adapted to particular EVA requirements. The complexity and the duration of specific tasks will require only a single two-person EVA.

An intermediate EVA requires development of new tools and equipment. Existing procedures and techniques will require modification and more extensive training will be necessary to accomplish the tasks. The complexity and duration of the specific tasks will require one or two two-crewmember EVA's.

A complex EVA requires development of new payload-unique tools and mobility aids. The tasks require extension of basic capabilities and may pose difficulties in access or restraint. Such requirements are more hazardous for the crew and the necessary procedures development and verification costs will reflect these additional procedures, training, and crew safety considerations. The complexity and duration of the tasks will require one or two two-crewmember EVA's.

EVA Mission Integration

6

The SSP payload integration process is used to define and document all payload EVA requirements. Determination of these requirements is accomplished during the development of the Integration Plan (IP) with the payload organizations. The EVA scenario and interface requirements are documented in Annex 11. For payload designers, incorporation of these man-machine interfaces constitutes a unique requirement for customer/SSP interaction during payload development. Keys to successful integration of EVA capability are consideration of EVA requirements at the earliest stages of payload design and concurrent establishment of an effective formal design review activity with the SSP involving both engineering and operational personnel with EVA experience.

EVA reserved envelopes fore and aft of a payload must be included in the payload control length as defined in the IP. Designing the EVA work area above the payload in the payload bay should be considered to minimize fore and aft reserved volume.

6.1 EVA Development Responsibilities

A payload EVA is a nonstandard service to the customer, and its inclusion in the IP initiates a series of EVA mission support activities:

- Hardware design
- EVA Interface Design Review
- Safety requirements
- Procedures development (neutral buoyancy evaluations)
- Hardware testing and certification
- Crew activity planning
- Crew training
- Real time support

Within these categories are tasks which are either the joint responsibility of the customer and the SSP or the sole responsibility of one organization.

Hardware Design

The development of specialized tools and hardware beyond those included in the list of available equipment is the responsibility of the customer. Special tools, translation aids, payload add-on stowage provisions, mission-unique equipment, manipulators, and crew or equipment restraints are some items which might be developed by the SSP more effectively.

SSP and customer-provided EVA hardware to accomplish a payload EVA task must be defined in the IP.

If unique EVA hardware is provided by the customer, the SSP prefers two sets of flight-certified hardware and requires one set of training hardware.

Design Reviews

The customer must perform a Preliminary Design Review (PDR) and a Critical Design Review (CDR) of customer-provided EVA hardware with SSP EVA engineering, operations, and safety representatives. Issues raised by these representatives must be resolved as part of the SSP Cargo Integration Review and the Payload Safety Review. It is the customer's responsibility to ensure that payload designs meet the requirements specified in Part II of this document.

Safety Requirements

The technical and system safety requirements specified in Safety Policy and Requirements for Payloads Using the Space Transportation System (STS), NSTS 1700.7B, current issue, apply to EVA hardware and operations. Payload Safety Review and Data Submittal Requirements, NSTS/ISS 13830, defines the safety review process which implements the safety requirements.

These safety reviews affect EVA planning in two ways. First, all EVA hardware and operations must meet the safety requirements. In addition,

contingency EVA requirements may be identified during the review process.

Neutral Buoyancy Evaluations

The NBL is used extensively in the development of EVA tasks and the associated hardware for intermediate and complex EVA's. Complicated and unique hardware requires early iterative evaluations involving pressure-suited exercises in a neutral buoyancy facility with customer-supplied mockups. These evaluations should take place before engineering designs are finalized to prevent costly changes. Prototype hardware can often be upgraded to support subsequent crew training. Mockup high fidelity is usually required only along the EVA translation paths and at the EVA worksites. For more information on the NBL, refer to Weightless Environment Training Facility General Operating Procedures, JSC 16908.

Procedures Development

Development of EVA procedures to be included in the mission Flight Data File (FDF) consists of several basic steps. Derived from the EVA requirements is a set of procedures which describe those actions required to accomplish the EVA task. Well before the system design is complete, a series of techniques is developed. These techniques are based on both a general knowledge of EVA capabilities and the current status of the payload design. As the design matures to a firm configuration, the techniques are refined and mature into the final EVA system procedures for this payload.

The SSP is solely responsible for final procedures development into the level of detail required for the FDF. Procedural checklists are formatted into FDF standard books, cue cards, and decals as required. Each element of the flight procedures is validated by testing to determine suitability for flight crew training and on-orbit use. When complexity and criticality demand, the use of flight or developmental hardware, high-fidelity training articles, or mission simulators may be required and will be reflected in the IP. Training-type hardware or a “desk top” evaluation on the flight hardware may also satisfy this requirement.

Hardware Test and Certification

EVA hardware flown by the SSP must be flight qualified by verification of certification requirements. These requirement procedures are fully explained in Payload Verification Requirements, NSTS 14046.

The first step in certification by test is the acquisition of hardware that is of flight configuration and has successfully passed the appropriate acceptance test as specified in the Acceptance Test Plan (ATP). Once the hardware is obtained, it is subjected to the various environments that may be encountered during the mission (launch, on-orbit, reentry).

In certification by similarity, the hardware is certified as flight qualified because of its similarity in design, materials, or use, and environment to another piece of flight hardware which was previously certified.

Certification by analysis does not require that a physical piece of hardware be obtained for testing. In this case, the design and assembly processes are scrutinized by stress, fatigue, fracture, corrosion, life cycle, and thermal analyses. A mathematical model of the hardware is constructed and simulated mission environments are imposed on the model.

Once the hardware has completed the certification process, the results are compiled into a Certification Package. Included in this is the Verification Comparison Matrix (VCM) form which provides a baseline for developing the certification checklist. Once the VCM for the hardware has been signed, the certification process is complete and the hardware is flight qualified.

Crew Activity Planning

Crew scheduling constraints affecting payload development can be found in Part II.

To support the crew activity planning, a listing of the payload events and flight conditions required for an EVA is documented in the IP Flight Planning Annex (Annex 2). EVA hardware and operations support requirements are documented in an Annex 11 submittal.

Crew Training

The conduct of crew training for EVA is the responsibility of the SSP. The EVA training provides crewmembers qualified to perform EVA tasks (Figure I.6-1). Their training covers the EMU, either internal or external airlocks, and EVA- related Orbiter systems operation and is

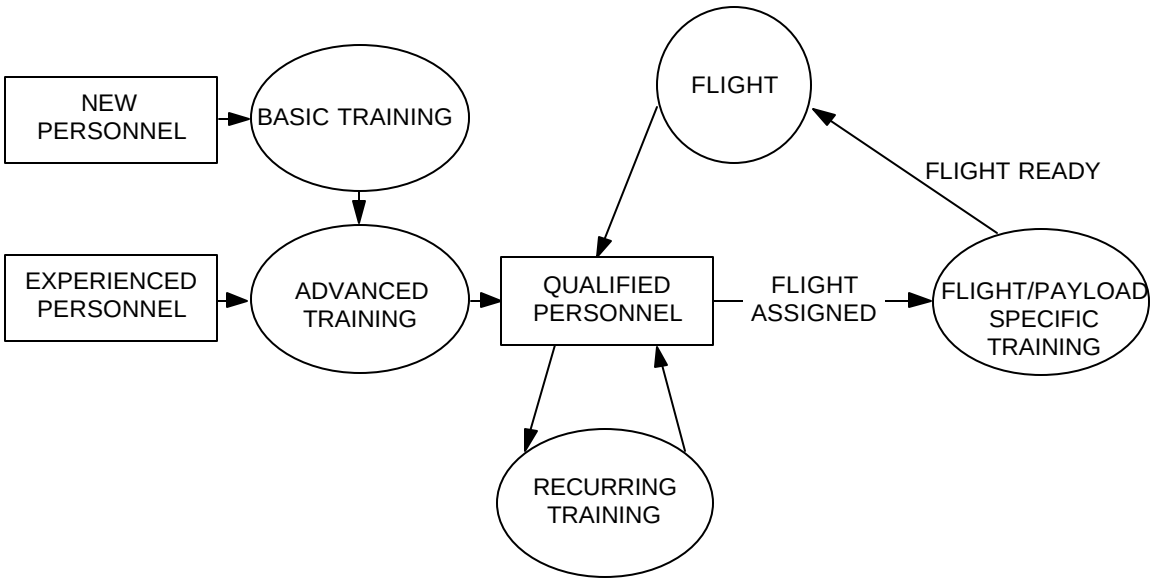

Figure I.6-1.- Crew training flow diagram.

conducted in classrooms, high-fidelity mockups, and part-task trainers. Instruction in and practice of EVA techniques in simulated weightlessness is performed in the NBL using Orbiter neutral-bouyancy trainers with high-fidelity EVA interfaces.

Like the design effort itself, payload training requirements are heavily dependent on the complexity and criticality of the given EVA task. Training requirements are minimized for simple tasks which are well within the recognized crewmember capabilities and constraints in the pressure-suited, zero-g environment. If the task is safety critical and therefore requires a very high probability for success; if there is small margin for error with regard to avoidance of hazards; or if the sequence of events is time critical with regard to either the task accomplishment or EMU endurance, unique training may be required.

Payload-specific EVA training is performed by the SSP using training articles provided by the customer with a level of fidelity of direct EVA interfaces appropriate to the complexity and criticality of the task. The SSP can develop and procure these training articles for the customer as a nonstandard service. Simplicity of the task, commonality of hardware with proven designs, and use of proven EVA techniques contribute significantly to low-cost crew training.

Real Time Support

It is the SSP's responsibility to carry out the mission's EVA requirements. Real-time ground support is also provided as required, and may include expertise from the customer organization. EVA tasks and decisions should be independent of ground support in the event of lost communications.

The payload operations support concept, flight control team structure, responsibilities, and joint operations interface procedures are developed and negotiated between the SSP and the customer during the integration process.

6.2 Sequence of Activities

The typical sequence of payload integration activities is included in Space Shuttle System Payload Accommodations, NSTS 07700, Volume XIV. A simplified diagram is shown in Figure I.6-2. Scheduled EVA requirements are usually identified early in the design concept development from the payload preliminary operational scenario, whereas unscheduled EVA requirements are often identified later as the SSP fail-operational/fail-safe criteria are applied to the maturing payload

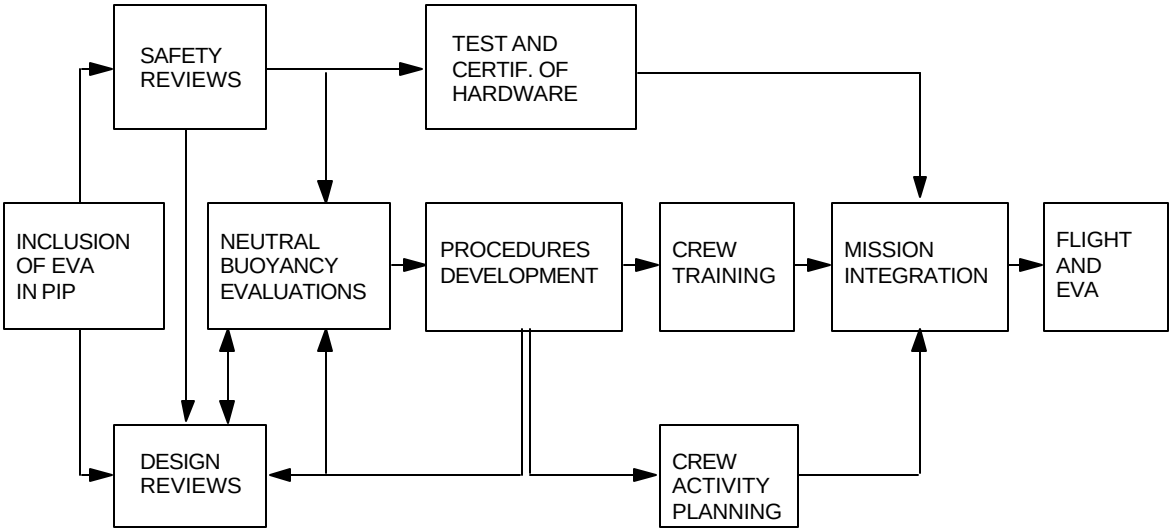

Figure I.6-2.- EVA mission integration.

design. In either case, an analysis of the EVA task must then be conducted, beginning with identifying the specific task requirements and then applying the information contained in this document regarding translation, access, restraint, and safety to develop an end-to-end EVA scenario. Some feedback into the design effort will occur at this point, and modifications to the basic payload design may be required.

An early joint customer/SSP evaluation of the proposed EVA scenario is highly recommended to review EVA hardware interfaces, safety, training requirements, procedures, flight planning, and flight operations. Every EVA task must be evaluated on its own merits, and this initial review activity brings together all the elements necessary to ensure a successful design effort. As a result of the joint review, the customer is ready to proceed with the payload design, applying the specific EVA design criteria, and also with preparation of the IP Annex 11.

There are three major benefits to be derived by the customer from the joint review. First, the customer can exercise contacts with the personnel who will be participating in the collective process of integrating the payload with the SSP and can benefit from their general EVA experience and lessons learned from other payload integration activities. Additionally, any trade-offs to be considered in selecting different approaches or even choosing to utilize EVA can be more clearly quantified. Finally, and as a result of the preceding benefits, the customer can design with reasonable confidence knowing that all payload and SSP requirements are being satisfied and that the chances are minimized for any critical discrepancies to go undetected before the remaining formal reviews are accomplished, or hardware is manufactured.

PART II

EVA Design Requirements

Introduction and Definitions

1

This section contains details of the specifications for designing EVA interfaces and accommodations. These requirements have resulted from application of the cumulative EVA experience in the Gemini, Apollo, Skylab, and Shuttle Programs to the Space Shuttle capabilities and specific requirements. The guidelines and constraints presented in this document are primarily concerned with safety, design of EVA support equipment, and man-machine interfaces for crew operation in the zero-g environment.

EVA hardware should be designed to operate under the conditions listed in System Description and Design Data - Contamination Environment, NSTS 07700, Volume XIV, Appendix 1. This document describes ground handling, launch, on-orbit, and reentry environments. EVA hardware must also meet the flammability and off-gassing requirements specified in Shuttle/ Payload Interface Definition Document for Middeck Payload Accommodations, NSTS 21000-IDD-MDK.

The following sections describe controlled requirements and specifications in specific terms. The words “shall” and “must” express provisions that are binding. The words “should“ and “may” express highly recommended but not necessarily mandatory provisions.

This part of the document specifies EVA design requirements for Space Shuttle payloads. EVA operational considerations and design requirements relating to the Space Station and future manned space vehicle activities can be found in Man/Systems Integration Standards (MSIS), NASA-STD-3000.

Design Requirements and Constraints

2

In considering an EVA mission from airlock egress through task completion and return to the cabin, payload designers should address the following:

- Airlock-to-payload access corridor
- Translation aids to worksites
- Crew and equipment safety
- Cargo transfer requirements
- Restraint provisions at worksites
- Field-of-view and lighting requirements
- Working volume requirements
- EVA glove interfaces
- EVA tool compatibility with the task and space environment
- Scheduling constraints

The following general EVA guidelines and constraints shall apply to payload EVA design:

a. EVA operations will be developed using the capabilities, requirements, definitions and specifications as set forth in this document. The following constraints will apply:

   No scheduled EVA will be planned to be performed prior to flight day 4 (approximately 72 hours MET).

   No unscheduled or scheduled EVA will be performed on flight day 1 (approximately 24 hours MET) or on the day before entry.

   The payload shall be designed to accommodate an unscheduled EVA no earlier than flight day 3 (approximately 48 hours MET).

   Furthermore,

   1. A payload shall be designed such that once a failure that leads to an EVA has been discovered, 25 hours is allotted for EVA preparation prior to starting actual EVA maintenance on the failed component.

   2. If the above case occurs on launch day, then approximately 44 hours is required between failure discovery and start of EVA maintenance.

b. The EVA operations are performed by two EVA trained crewmembers, and a rest day should be allowed between EVA's.

c. Scheduled EVA periods should not exceed one 6-hour duration per day excluding the time required for EVA preparation and post-EVA activities.

d. The EVA may be conducted during both light and dark periods. Airlock egress and ingress may also be performed during either period.

e. The EVA is not constrained to ground communication periods.

f. Payloads requiring EVA operations must size access corridors and work areas to allow the EVA crewmember to perform the required EVA tasks safely and with adequate mobility (minimum of a 48 inch diameter cylinder.)

g. Payload and support mechanism design must not inhibit unobstructed EVA access to potential Orbiter contingency work areas in the payload bay. The centerline and bulkhead latches must be accessible in the entry (doors closed) configuration. This may be in contradiction to the allowable payload envelope. For these cases, exemptions may be obtained.

h. Neither payload configuration nor EVA payload operations will inhibit a rapid return of the EVA crewmember to the airlock hatch from any location in the payload bay. Payload bay door closure must be possible within 20 minutes following an EVA-terminating contingency to support the contingency return requirement defined in Safety Policy and Requirements for Payloads Using the Space Transportation System (STS), NSTS 1700.7B, current issue. This will allow approximately 20 minutes to accomplish payload safing (stowage/jettison) as required.

i. For those payloads requiring an EVA to allow payload operations, the payload bay must always be left in a configuration which meets the safety requirements of NSTS 1700.7B.

j. EVA support equipment, loose payload components, and umbilicals must be firmly secured or tethered at all times during EVA operations to prevent loss, damage, or entanglement.

k. The size of the airlock, tunnel adapter, and associated hatches limits the external dimensions of packages that can be transferred to or from payloads to 18 inches (457 mm) x 18 inches (457 mm) x 50 inches (1270 mm) for pressure suited operations. Package sizes exceeding these dimensions shall be evaluated on an individual basis.

l. Payload components located within 24 inches (61.0 cm) of an EVA translation path or worksite shall be capable of withstanding inadvertent EVA contact (125 lbs [556N] over a 0.5 inch [1.27 cm] diameter). Payload components susceptible to inadvertent physical damage or contamination by an EVA crewmember should be guarded or otherwise protected.

m. EVA crewmembers will not operate in, on, or near free flying satellites or payloads which have an excessive rate of rotation about any axis. The maximum acceptable rotation rate will be determined on a case-by-case basis.

n. Payload hatches for habitable payload volumes shall be no smaller than the Orbiter airlock hatch. If the Orbiter cabin is the primary pressure source for a payload volume, the Orbiter-to-payload interface hatch shall open toward the Orbiter cabin. Hatches shall be designed with redundant pressure seals and an observation port. Hatches shall be designed so that a pressure-suited crewmember can dismantle a failed locking mechanism, equalize the pressure, and open the hatch from either side. The tools required to dismantle the mechanism shall be located on both sides of the hatch. Pressure equalization valves, gauges, and relief valves are also required but the exact specifications may vary for different applications.

2.1 Airlock to Payload Access Corridor

- Additional clearance between payloads on mixed cargoes may be imposed to provide access corridors on the payload requiring a planned EVA. Payload customers shall provide access to the EVA work area and to the components requiring service. EVA crew transfer corridors and work areas must be a minimum of 48 inches [122 cm] in diameter.

- Payload customers shall provide a minimum translation corridor for EMU-suited crewmembers. The corridor is a 43-inch (1.09 m) diameter circle for straight-line translation through hatches and tunnel-like structures. A translation path requiring the EVA crewmember to use mobility aids (e.g., handholds, payload structures) is also no less than 43 inches (1.09 m) in diameter to avoid crewmember contact between EMU hardware and vehicle/payload structures (Figure II.2-1). Additional volume may be required when other than straight-line translation is needed.

- Payloads shall not obstruct egress from the Orbiter airlock. A 48-inch (1.22-m) diameter clear envelope is required for airlock egress and outer hatch operation. Any payload or support provision located in the shaded areas of Figure II.2-2 must be removable or jettisonable so that this area is available before committing to an EVA. Variations to these guidelines can be evaluated on an individual basis. Other Orbiter configurations using the airlock, tunnel adapter, or docking module also require special evaluation.

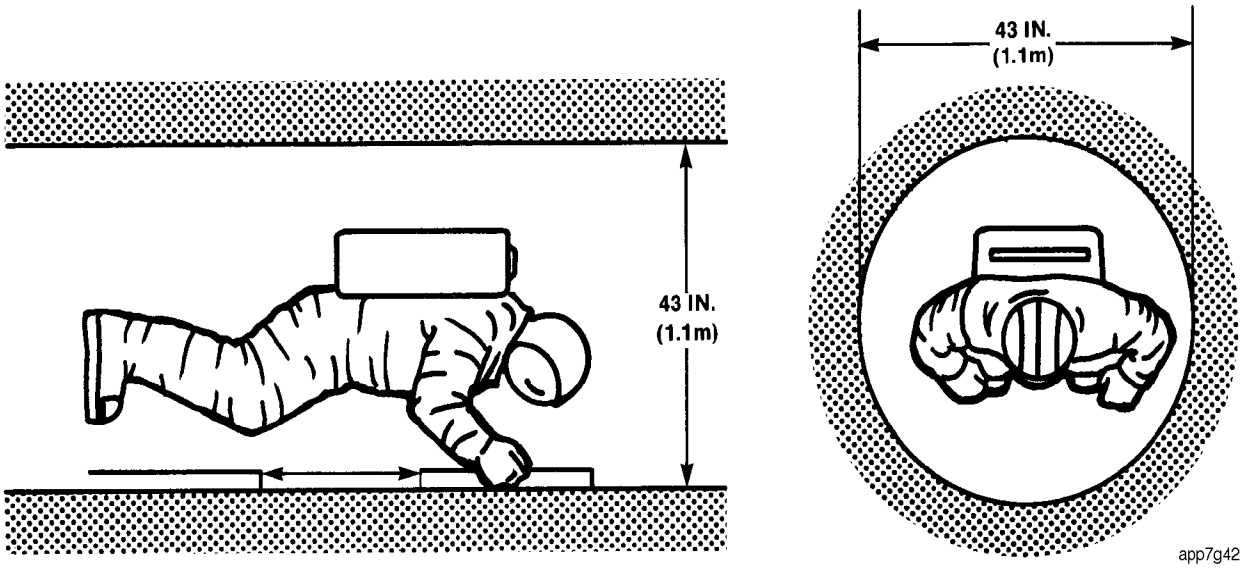

Figure II.2-1.- Envelope for handrail-assisted translation.

2.2 Translation Aids to Worksites

- Crew translation provisions (e.g., handholds, handrails, mobility aids) in the payload planned work area shall be provided by the payload customer if task requirements exceed those provided by the Orbiter-attached payload bay handrails. Standard Orbiter handrail locations are identified in Figure II.2-3.

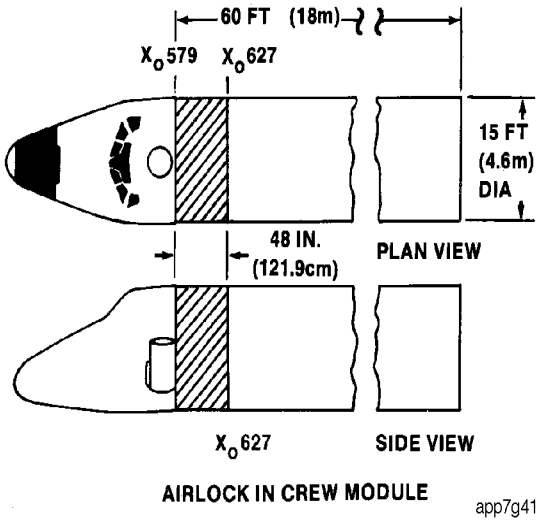

Figure II.2-2.- Reserved EVA envelope.

- All payload handrails and handholds must meet the standardization requirements given in Table II.2-I.

- Payload equipment or surfaces located within 24 inches (61.0 cm) of an EVA translation path or worksite shall be capable of withstanding inadvertent EVA contact (125 lbs [556 N] over a 0.5 inch (1.27 cm) diameter). Payload equipment or surfaces that are not located within 24 inches of an EVA translation path or worksite and are sensitive to inadvertent physical damage by an EVA crewmember should be protected or identified as EVA sensitive hardware.

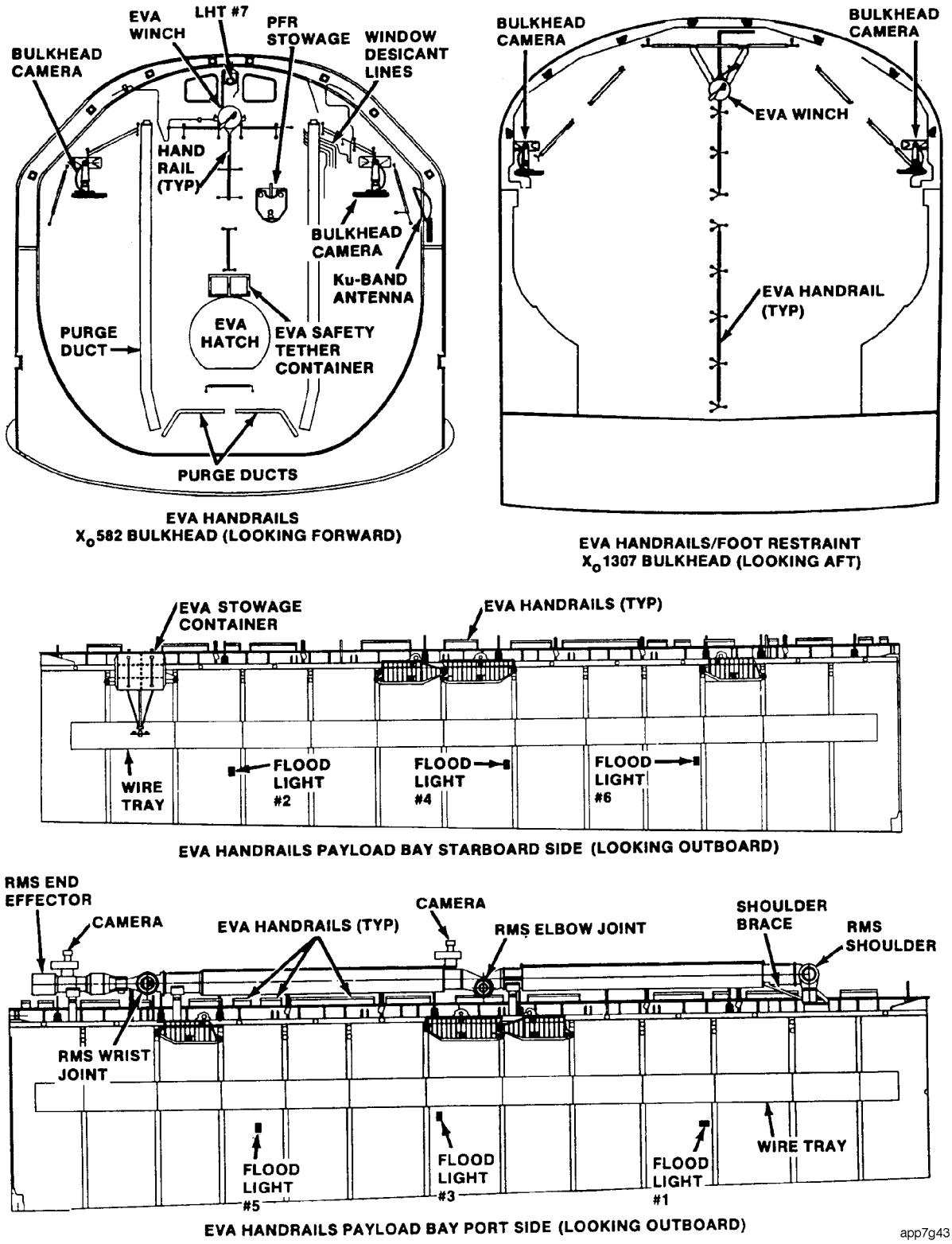

Figure II.2-3.- Shuttle payload bay handrail locations.

TABLE II.2-I.- HANDHOLD AND HANDRAIL GENERAL DESIGN CHARACTERISTICS

Design parameter	Design requirement/remarks
Cross section	The EVA handholds/handrails shall have a cross section of 1.38 by 0.75 in. (33 by 19 mm). 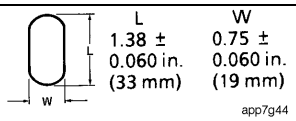 An example is a handrail which is fabricated from 6061-T6 aluminum tubing 1.125 in. outside diameter (OD) by 0.065 in. wall thickness (28.6 mm OD by 1.65 mm wall thickness), which gives a cross section of 1.38 by 0.75 in. (33 x 19 mm).
Length	The minimum grip length of handholds/handrails for EVA is 6.0 in. (15.24 cm).
Mounting clearance	The minimum clearance distance between the lower surface of the handrail/handhold and the mounting surface is 2.25 in. (5.72 cm).
Spacing for translation	For extravehicular translation, handholds/handrails shall not be separated more than 36 in. (92 cm). Maximum spacing of 24.0 in. (61 cm) is preferred.
Spacing for worksites	Handhold/handrail spacing shall not exceed 18.0 in (45.8 cm) above or below the shoulder or 24.0 in. (61.0 cm) to the left or right of the body centerline when working in a foot restrained position.
Loading	Extravehicular handholds/handrails shall be designed to a minimum crewmember-induced zero-g design load of 220 lb (832 N) in any direction.
Tether attachment	EVA handrails/handholds will accommodate safety tether hooks at a spacing not to exceed 36 in. (92 cm), preferred 24 in. (61 cm).
Tether attachment loading	Extravehicular handhold/handrail stand-off tether points shall be designed to a limit load of 574 lb (2553 N) in any direction.
General location	EVA handholds and handrails should be located to provide crewmember protection from thermal, electrical, pyrotechnic, radiological, and electromagnetic equipment. Potentially dangerous equipment shall not be located within 24.0 inches (61.0 cm) of the translation route or worksite. Thermal control shall be compatible with temperature specifications of the assembly (PGA). Handholds used as ingress aids for foot restraints should be vertically oriented with respect to the foot restraint platform and should extend from 36 in. (92 cm) to 48 in. (122 cm) above it.
Lighting	EVA handholds/handrails shall be illuminated in accordance with SC-L-0002.
Material	Handholds and handrails shall be fabricated from metals. Other rigid, semirigid, or nonmetallic materials also may be used but must not be susceptible to brittle fracture.
Grasp surface	Handholds and handrails shall have no sharp edges or protrusions injurious to the crewmember, EMU, or equipment.
Color	Lettering or numbering systems may be used to assist in rapid identification. Color shall be yellow from FED-STD-595A and minimize specular reflections.

When properly designed and located, handrails and handholds (refer to Figure II.2-4) may also provide location protection to payload components from damage by the crewmember as well as convenient locations for temporary restraint of loose equipment. Some structural components that meet the

requirements of Table II.2-I may double as translation or mobility aids if the structural components are suitably identified. Payload handrails must be painted yellow so that the crew can readily identify places to hold on. Handrails not rated per the loads in table II.2-I shall not be yellow. Payload designers should consult with the SSP for recommended handrail/handhold locations.

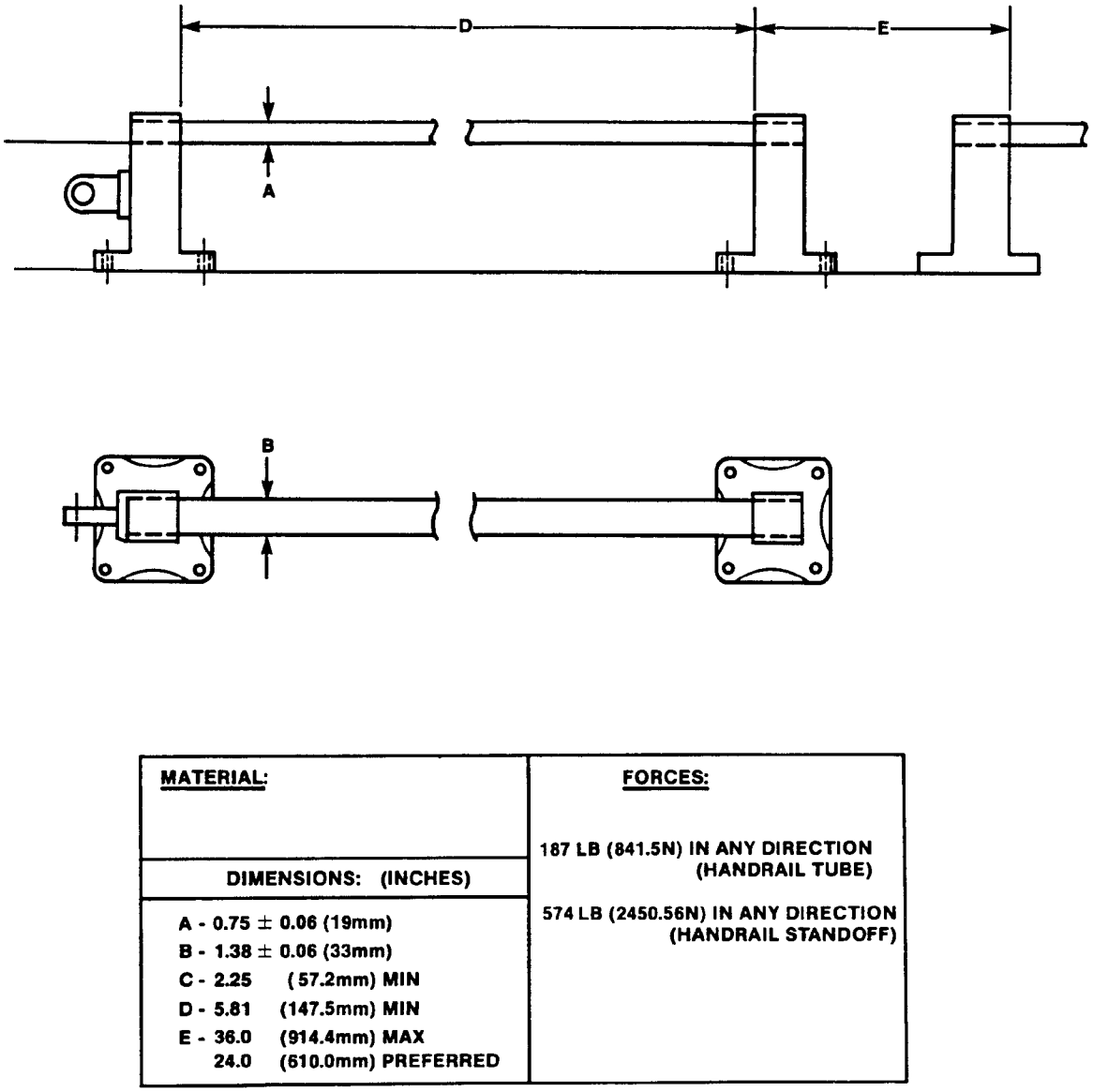

Figure II.2-4.- Handhold/handrail example.

- The Remote Manipulator System (RMS) with Manipulator Foot Restraint (MFR) may also provide remote access to detached payloads, but it is preferred that the RMS with MFR be used only with attached payloads. The RMS reach envelope with the MFR and EVA crewmember attached is constrained to arm geometries which will not allow damage from EVA force inputs. Designers considering MFR operations should consult with SSP RMS personnel early in the design process.

2.3 Crew and Equipment Safety

- Payload designs shall conform to Safety Policy and Requirements for Payloads Using the Space Transportation System (STS), NHB 1700.7, current issue.

- Payload designs shall protect the crew from electrical, electronic, fluid, radiation, mechanical, chemical, propellant, and other hazards including inadvertent actuation of stored energy devices and pyrotechnics. Hazards shall be physically identified by markings, labeling, and coloring in accordance with NASA-STD-3000, Man Systems Integration Standard, Volume 1.

- No credible single failure or operator error shall result in damage to equipment nor shall result in the use of contingency or emergency procedures.

- No two failures and/or operator errors shall result in personnel injury or loss of life or prevent the safe return of the Orbiter vehicle.

- A major safety concern in designing for Shuttle EVA is the compatibility of the Orbiter and payload systems/structures with the EVA crewmember's support equipment - particularly the life support systems and space suit components. Payload equipment, structures along translation routes, worksite provisions, and each equipment item requiring an EVA interface must be designed to preclude sharp edges and protrusions or must be covered in such a manner as to protect the crewman and his critical support equipment. The criteria relative to sharp edges and protrusions are provided in Tables II.2-IIa and b and Figure II.2-5. Sharp-edge inspections shall be performed on all payloads. Sharp edges may sometimes be eliminated by applying a space-compatible tape to cover the surface.

- Payload customers should be aware of the following environmental concerns:

  - Payloads sensitive to EVA equipment effluent discharge should be provided with inherent self-protective features, provided with protectors to be installed by the EVA crewmember, or have defined EVA crewmember operational constraints. The EMU sublimates approximately 1.4 lb/hr (0.64 kg/m) of water. The EMU specification leakage rate is 50 standard cubic centimeters (SCC) per minute of oxygen. During EVA this leakage will include small amounts of CO_2, water vapor, and trace gases.

  - The EMU radiates 4 V/m at a distance of 1 meter in the UHF band (259.7 to 296.8 megahertz) when transmitting voice. Maximum field strength occurs directly behind the EMU (for UHF) and above the helmet (S-band). The EMU-light discharge (10 footcandles (108 lux)) should be considered for light-sensitive payloads.

2.4 Cargo Transfer Requirements

Not all cargo transfer requirements may be satisfied by the RMS or by manual means. Factors such as package geometry, size, mass, transfer clearance envelope, or positioning requirements may render those means unsuitable for transporting replacement modules or servicing equipment from their launch stowage locations to the servicing worksite. No specific criteria exist for the design of payload-peculiar transfer aids; Figures II.2-6 and II.2-7 illustrate two concepts employed during the Skylab Program. The powered extendable boom was used to transfer a 125-pound (56.7-kg) film magazine and the clothesline handled relatively small objects over what would have been a tedious manual translation route.

TABLE II.2-IIa.- EDGE, CORNER, AND PROTRUSION CRITERIA-
EDGE AND IN-PLANE CORNER RADII*

Application	Radius				Remarks	Figure II.2-5 Referenced
	Outer		Inner			
	in.	mm	in.	mm		
(a) Openings, panels, covers (corner radii in plane of panel)	0.25	6.4	0.12	3.0	Preferred	
	0.12	3.0	0.06	1.5	Minimum	
(b) Exposed corners:	0.50	13.0	–	–	Minimum	(a)
(c) Exposed edges: (1) 0.08 in. (2.0 mm) thick or greater	0.04	1.0	–	–		(b)
(2) 0.02 to 0.08 in. (0.5 to 2.0 mm) thick	Full Radius		–	–		(c)
(3) less than 0.02 in. (0.5 mm) thick	Rolled or Curled					(d)
(d) Flanges, latches, controls, hinges, and other small hardware operated by the pressurized-gloved hand	0.04	1.0	–	–	Minimum required to prevent glove snagging	–
(e) Small protrusions (less than approximately 3/16 in. (4.8 mm)) on toggle switches, circuit breakers, connectors, latches, and other manipulative devices	0.04	1.0	–	–	Absolute minimum unless protruding corner is greater than 120°	

* A 45° chamfer by 0.06 in. (1.5 mm) (minimum) with smooth broken edges is also acceptable in place of a corner radius. The width of chamfer should be selected to approximate the radius corner described above.

TABLE II.2-IIb.- EDGE, CORNER, AND PROTRUSION CRITERIA - PROTRUSIONS AND OUTSIDE CORNERS

Application	Criteria/remarks
Latching devices	All latching devices shall be covered in a manner that does not allow gaps or overhangs that can catch fabrics or pressure suit appendages, or shall be designed in a manner to preclude the catching of fabrics and pressure suit appendages. All surfaces and edges shall be smooth, rounded, and free of burrs.
Lap joints in sheet metal and mismatching of adjacent surfaces	All surfaces shall be mated within 0.03 in. (0.8 mm) of flat surface at edges, or shall be butted or recessed. All exposed edges must be smooth and radiused 0.06 in. (1.5 mm) minimum, chamfered 45°, or shall be covered with an appropriate material to protect EVA gloves.
Sheet metal structure, box and cabinet three-plane intersecting corners	Spherical welded or formed radii shall be required unless corners are protected with covers.
Screwheads, bolts, nuts, and nut plates, excess threads and rivets that can be contacted by crewmember	All screwheads and boltheads shall face the outside of the structure, if possible. Where nuts, nut plates, and threads are exposed, the nuts, nut plates and threads are exposed, the nuts, not plates and threads shall be covered in a secure manner. Recessed heads or the use of recessed washers is recommended. Overall height of heads shall be within 0.125 in. (3.2 mm) or covered unless more than 7 head diameters apart from center to center. Height of roundhead or ovalhead screws is not limited. Screwheads or boltheads more than 0.25 in. (6.4 mm) deep must be recessed or be covered with a fairing, except those intended to be EVA crew interfaces. Rivet heads shall face out on all areas accessible to crewmember and shall protrude no more than 0.06 in. (1.5 mm) unless spaced more than 3.5 head diameters from center to center. In all exposed areas where unset ends of rivets extend more than 0.12 in. (3.1 mm), or 0.50 in. (12.7 mm) of unset and diameter if more than 0.12 in. (3.1 mm), a fairing shall be installed over them. This applies to explosive, blind,or pull rivets, etc. Unset ends of rivets must have edges chamfered 45° or ground off to a minimum radius of 0.06 in. (1.5 mm). A maximum gap of 0.02 in. (0.5 mm) shall be allowed only between one side of a fastener head and its mating surface. Burrs must be prevented or eliminated. Use of Allen heads is preferred. Torque-set, slotted, or Phillips head screws must be covered with tape or other protective materials or be individually deburred before flight.

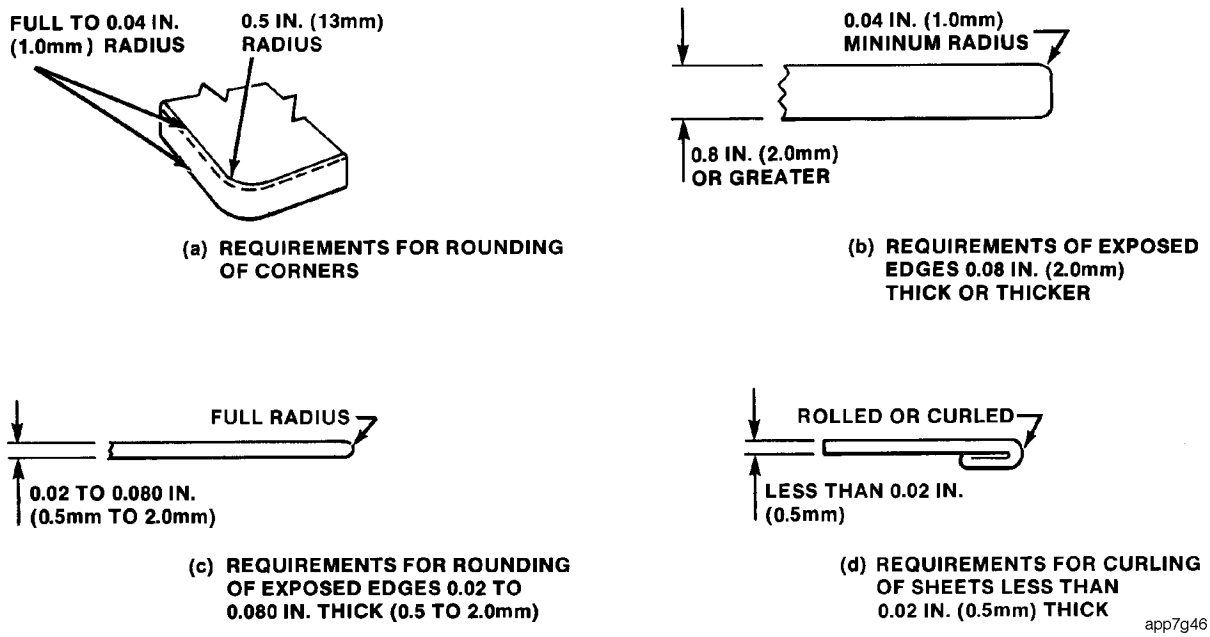

Figure II.2-5.- Exposed corner and edge requirements.

Figure II.2-6.- Powered extendable boom cargo transfer concept.

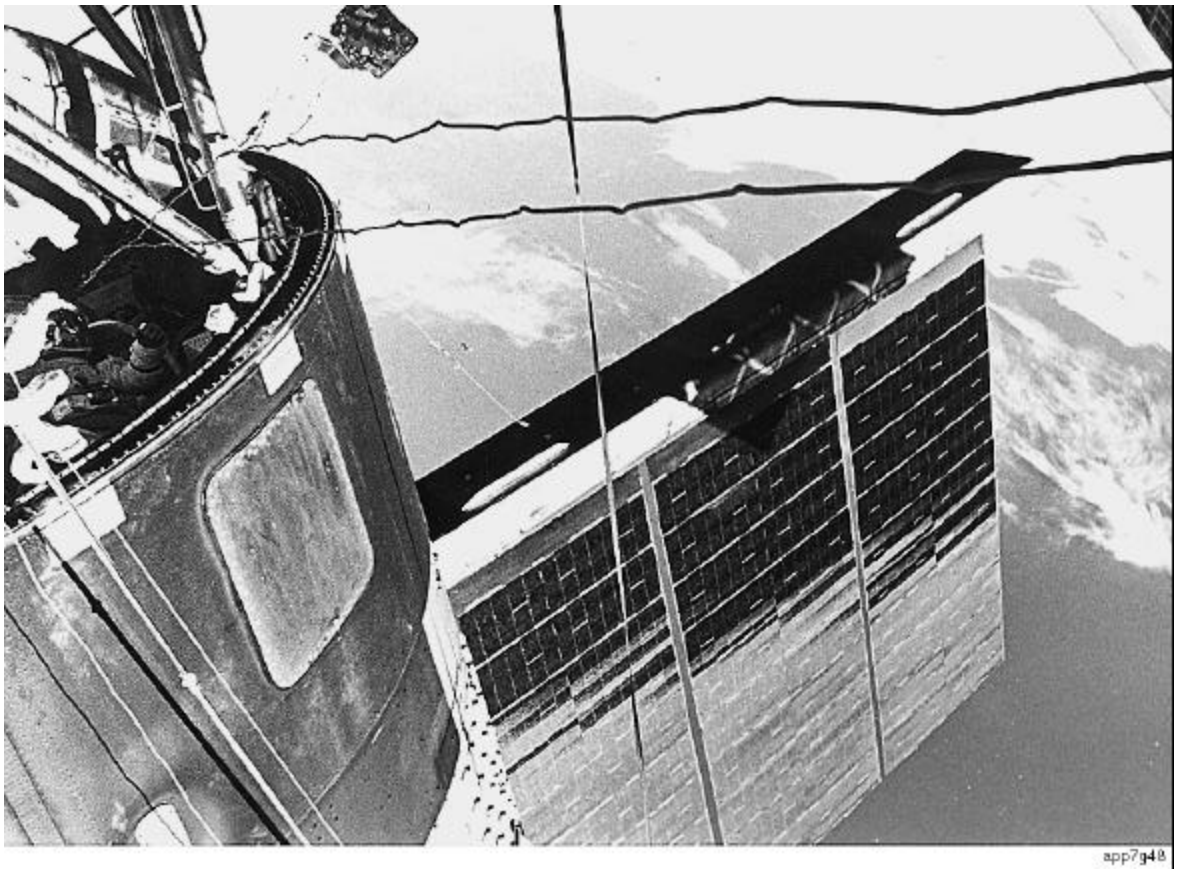

Figure II.2-7.- Clothesline cargo transfer concept.

Specialized SSP transfer requirements may be satisfied by items described in EVA Catalog Tools and Equipment, JSC 20466. Items such as the large and small trash bags, specialized transfer bags, and tool caddies may be used to transfer various sized equipment.

2.5 Restraint Provisions at Worksites

Proper restraint of the extravehicular crewmember and equipment at the worksite is mandatory to ensure successful maximum EVA capability. Failure to provide adequate restraint can be the single most limiting factor of all EVA design elements, causing unnecessarily high workloads, early onset of crew fatigue, overloading of the life support system, and premature termination of the EVA. Techniques in the use of restraint provisions are an essential part of basic EVA training.

- Payloads should utilize crew and equipment restraint provisions available from the SSP inventory and provide interfaces for their attachment at the payload worksites.
- EVA crewmembers shall always be tethered to the Orbiter or ISS.
- The use of handholds and tethers (e.g., Body Restraint Tether) may be adequate for low-force, short-time tasks such as inspections, monitoring, and switch activation. Foot restraints (Table II.2-III) have proven to be

TABLE II.2-III.- EVA FOOT RESTRAINT GENERAL SPECIFICATIONS

Design parameter	Design requirement/remarks
Mobility	EVA foot restraints shall maintain foot position to allow the crewmember a complete range of motion (roll, pitch, yaw) within the constraints of the space suit.
Restraint spacing	• Boot center-to-center distance = 10.0 to 17.0 in. (25.4 to 43.2 cm). • Center dimension shall be determined from analysis of the tasks to be performed.
Load capacity	• Ultimate design load = 140 lb (623 N) minimum in tension and shear. • Torsion = 1800 in-lb (203 N-m) minimum.
Hazards	Foot restraints shall not be located within 24 in. (30.5 cm) of equipment where failure would cause injury to the crewmember. Potential areas of damage to flight equipment by the crewmember shall be identified. Foot restraints shall incorporate a backup EMU boot release.
Material	Metals should be the primary material for foot restraint fabrication. Other rigid or semirigid materials may be used when warranted by design constraints. Materials must be approved in accordance with NASA-STD-6001, Flammability, Odor, Offgassing and Compatibility Requirements and Test Procedures for Materials in Environments that Support Combustion.
Interface Test	If a payload customer manufactures foot restraints, a fit check with all sizes of pressurized flight EMU boots is required.*

* Reference ICD - HSD-3-0045-02-0.

the most effective restraint system for extravehicular functions requiring force applications and precise positioning. A 20- to 30-degree toe-down orientation is most comfortable in the EMU.

- A foot restraint platform can be attached directly to the payload structure, or either PFR or worksite interface (WIF), PFR sockets may be mounted on the payload to accept the PFR or APFR, respectively. Reference EVA Catalog Tools and Equipment, JSC 20466, for details. If a WIF is used on a payload or carrier that is planned to be returned in the payload bay, the WIF must have the capability of being removed by an EVA crewmember on orbit. Figures II.2-8a and b show an example with the PFR platform bolted to a payload.

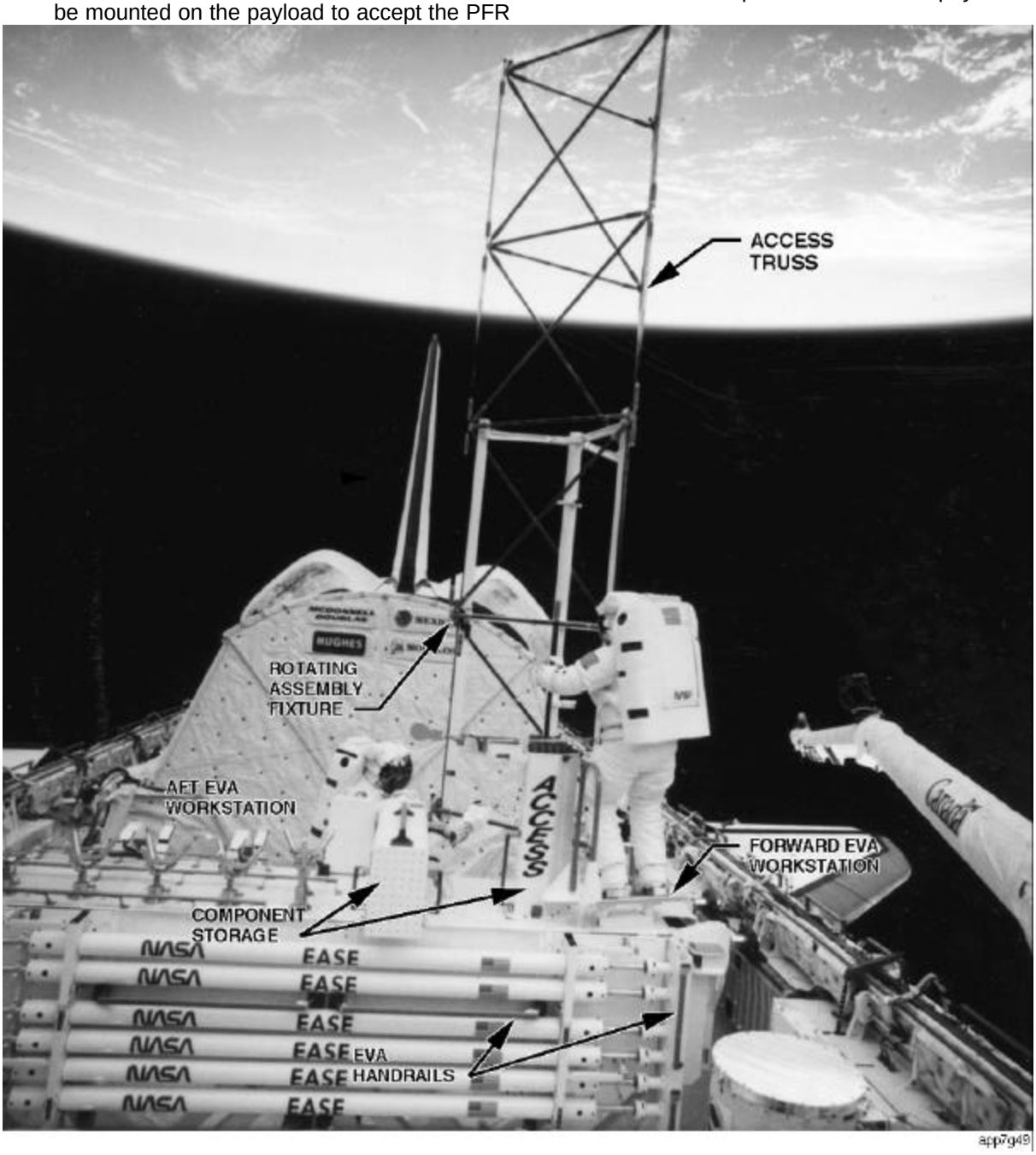

Figure II.2-8a.- PFR location example.

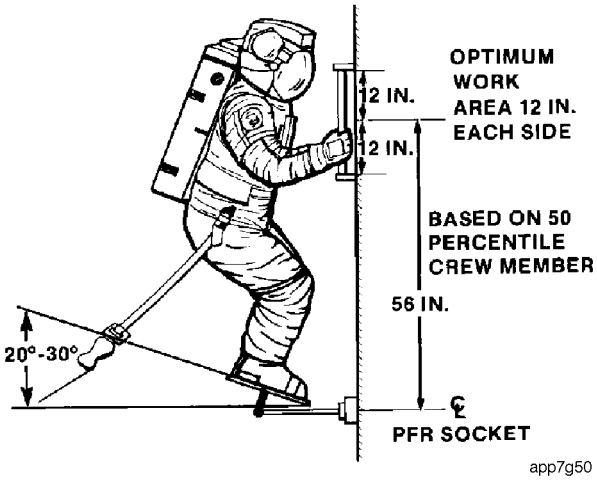

Figure II.2-8b.- PFR location example (continued).

- All equipment transported or handled during EVA shall be tetherable. Any tools or equipment detached from the vehicle structure must be tethered to the crewmember, the vehicle, or the payload whenever the tools or equipment are not securely stowed or installed. Even though EMU waist and wrist tethers can satisfy tethering requirements during translation, a tether and a hook integral to the object or its transfer container also satisfies temporary stowage requirements at the worksite or along the translation route (Figure II.2-9).

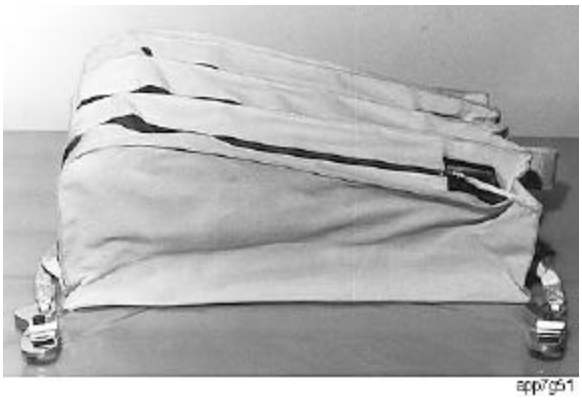

Figure II.2-9.- Tool bag with tether hooks.

The size of tether points (refer to Figure II.2-10) is driven by the dimensions of the three EVA tether hook types already in the SSP

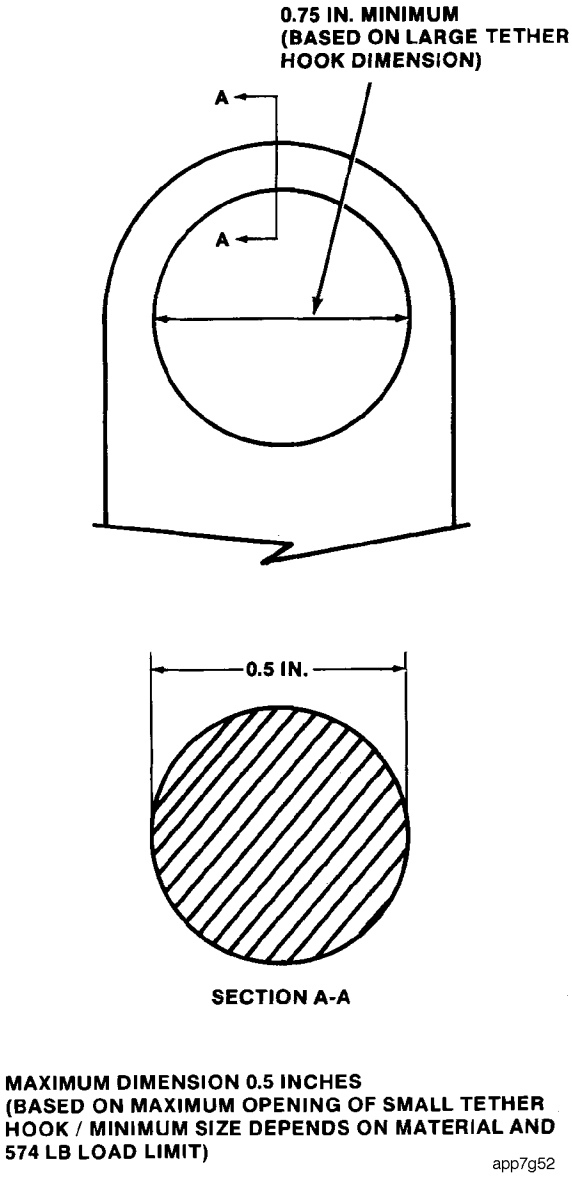

Figure II.2-10.- Tether point requirements.

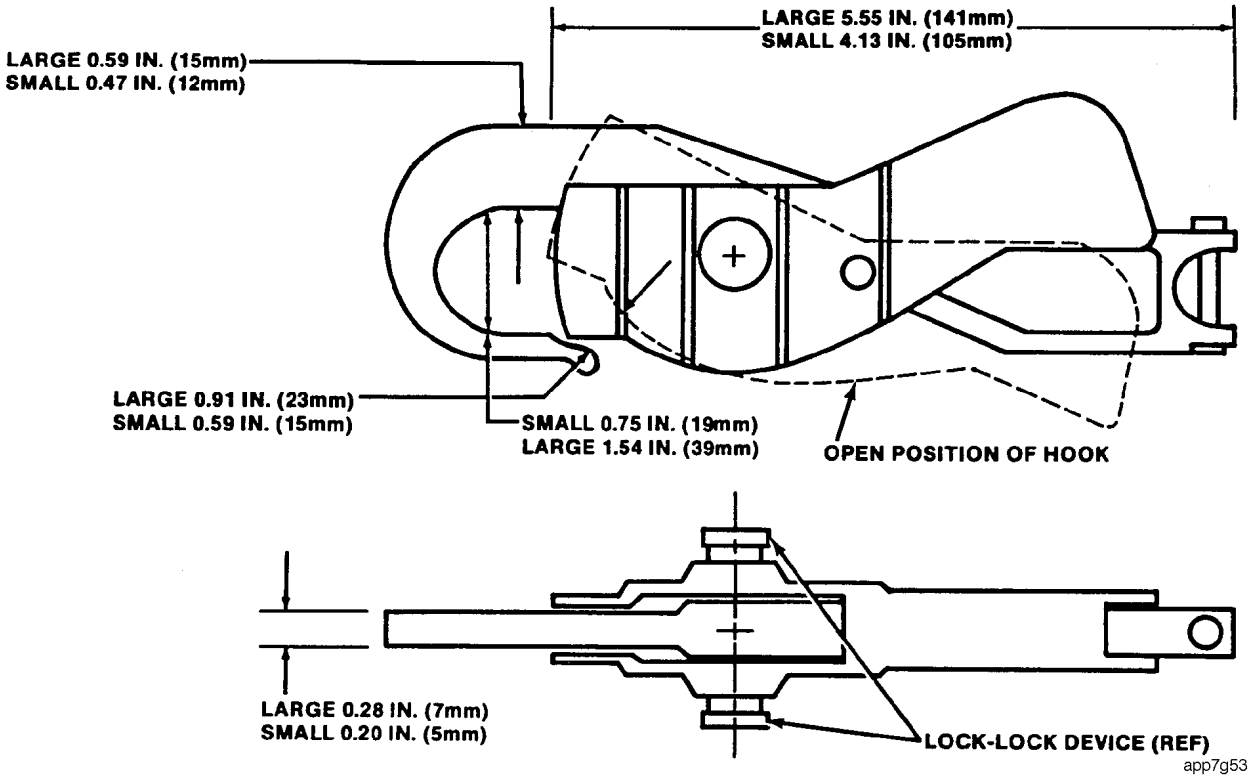

Figure II.2-11a.- Shuttle large and small tether hook dimensions.

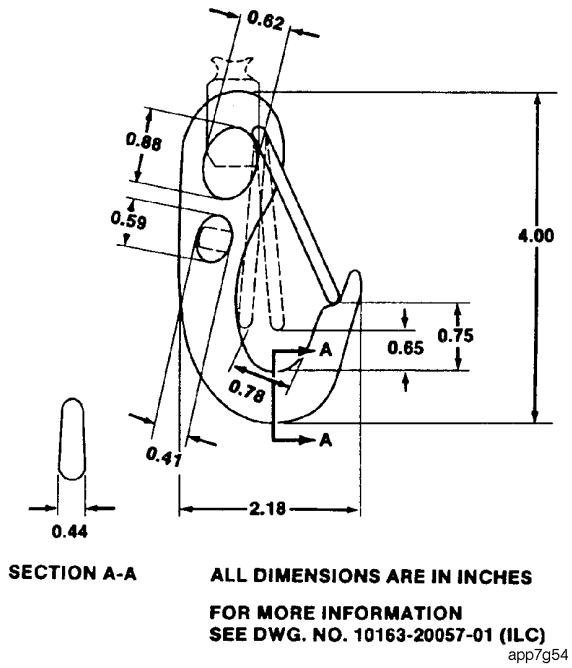

Figure II.2-11b.- Payload retention, PRD, hook (French hook).

EVA inventory. These hooks are shown in Figures II.2-11a and b with important dimensions.

Only two dimensional requirements exist for tether points: the size of the opening (driven by cross-section dimension of large waist tether hook) and the cross-section dimension of the tether point (driven by maximum opening of small wrist/waist tether hook). These tether point requirements are shown in Figure II.2-11.

The strength requirements for a tether point depend on its intended use. Tether points integral with restraint, mobility, translation aids, and at work stations shall be as strong as the waist tether and safety tether restraint system (574-pound (2.6-kN) limit load in any direction).

Tether points on small, lightweight tools shall be strong enough to withstand crew-induced handling limit loads of approximately 30 pounds (135 N). Experience has shown that heavier tools need tether points with strengths

approximately equal to their weight.

Each payload EVA task requiring manipulation of loose articles should be studied individually to determine the type and quantity of restraints required.

- Where several worksites and various types of support equipment are included in a payload, a portable work station may be required. A portable work station would incorporate a base structure with foot restraints and attachment provisions for modularized support equipment. Factors to be considered in work-station design include payload bay door envelopes, launch and entry stowage, tool stowage, translation to worksite (RMS), attachment to the payload, and loads transmitted through the device to the payload by the crewmember. All work-restraint/work-station designs must incorporate some type of ingress aid, such as an appropriately placed handhold, to assist the crewmember in maintaining body position until he/she has successfully ingressed the restraint. Experience has shown that a considerable amount of effort can be wasted before the crewmember begins an EVA task if the restraint provisions are not complemented in this manner. An example work station was used in the LEASAT salvage mission and is shown in Figure II.2-12.

Figure II.2-12.- Work station used in LEASAT salvage mission.

2.6 Visibility and Lighting Requirements

The lighting requirements for EVA can usually be satisfied by the SSP through a combination of ambient solar illumination, permanently mounted lights, and portable lights. Requirements that exceed the lighting provided by the payload bay, RMS, and EMU helmet-mounted lights shall be satisfied by payload-provided lights. Most payload customers discover the need for supplemental lighting through preliminary simulations rather than through analysis of technical specifications. In some cases where the EMU helmet lights are inadequate for illumination of detailed work, a hand-held or specially mounted flashlight usually suffices. Lighting simulations using a one-g mockup should be planned early in the design phase.

2.7 Working Volume Requirements

EVA tasks involving extensive body and arm manipulation need a working envelope of 4 feet (1.2 m) minimum (Figure II.2-13); the exact size is dependent on the EMU dimensions and the type of task to be performed. Figure II.2-14 illustrates the dimensions of the EMU. Access volume is not necessarily equivalent to required working volume; the latter also includes the factors of reach and force applications as well as the crewmember's ability to see the task area. Adequate working volume therefore cannot always be specified and must be evaluated on a case-by-case basis.

For payload servicing operations that require reaching into an aperture, designers should position the equipment as close to the exterior surface as the design permits while allowing sufficient volume for access by the EVA glove and for crewmember viewing. The minimum work envelope required for a gloved hand is shown

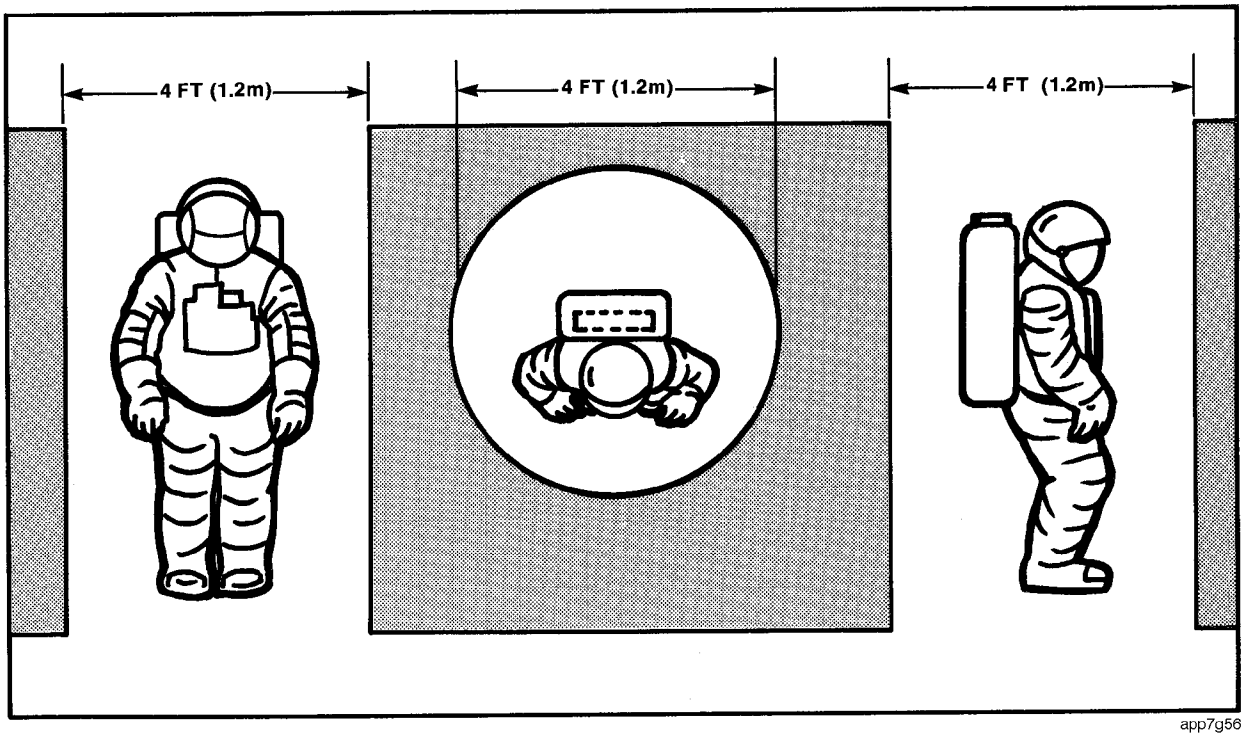

Figure II.2-13.- Recommended working volume for manipulative EVA tasks.

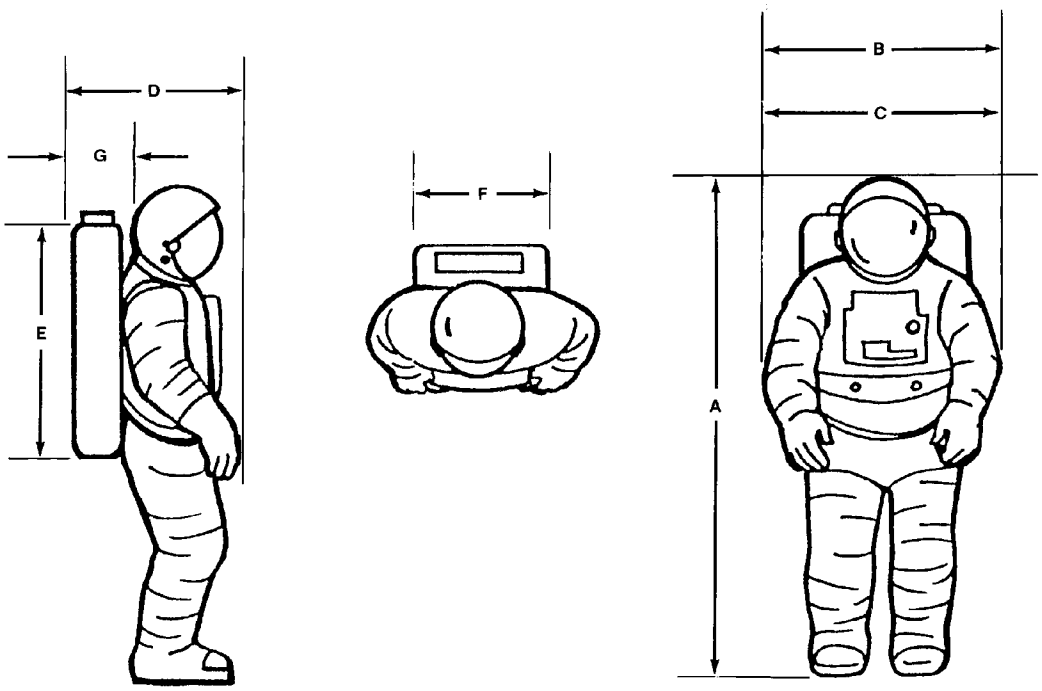

SUIT DIMENSIONS	SIZE RANGE 5TH PERCENTILE FEMALE		95TH PERCENTILE MALE	
A - HEIGHT	67.5	(171.5)	75.5	(191.8)
B - MAXIMUM BREADTH AT ELBOWS (ARMS RELAXED)	-	-	29.4	(74.7)
C - MAXIMUM BREADTH AT ELBOWS (ARMS AT SIDE)	-	-	26.4	(67.1)
D - MAXIMUM DEPTH WITH PLSS/SOP	26.0	(66.0)	28.4	(72.1)
LIFE SUPPORT SYSTEM DIMENSIONS				
E - HEIGHT	32	(81.3)	32	(81.3)
F - BREADTH	23	(58.4)	23	(58.4)
G - DEPTH	7	(17.8)	7	(17.8)

ALL DIMENSIONS ARE IN INCHES WITH CENTIMETERS IN PARENTHESES

PLSS - PRIMARY LIFE SUPPORT SYSTEM

SOP - SECONDARY OXYGEN PACK

app7g57

Figure II.2-14.-.- SSP EMU dimensions.

in Figure II.2-15. The 8-inch (0.20-m) minimum aperture must be increased for operation of valves, connectors, and latches requiring torquing motions or heavy force application. Tool extensions may be used to avoid the need for the large glove access envelope if adequate visibility is provided.

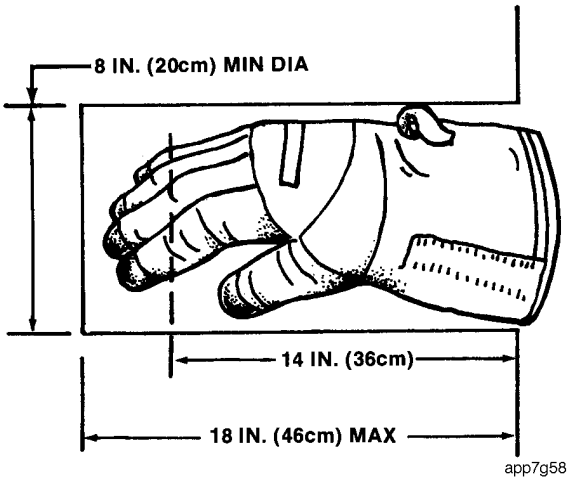

Figure II.2-15.- Work envelope for gloved hand.

2.8 Glove Interface

The EVA glove assemblies are designed to allow the hand to function in an operational mode with a minimum of mobility restriction while satisfying contact temperature and pressure requirements. The gloves also allow firm grasp retention of handholds, switches, tools, etc. Hand fatigue remains a major factor limiting EVA task duration and complexity.

The gloves are designed to withstand contact temperatures of 235 degrees to -180 degrees F (112 to -118 degrees C) with a contact pressure of 1.0 psi (7 kPa) without discomfort to the hand for as long as 0.5 minute. For contact longer than 0.5 minutes or for designated EVA crew interfaces as specified in the list below, the gloves are designed to withstand contact temperatures of 145 degrees F to -45 degrees F (63 to -43 degrees C). Thermal mittens are provided to extend the contact temperature (up to 350 degrees F [63 to -43 degrees C]) and/or the exposure time if necessary, but these are extremely restrictive to the crewmember's hand dexterity and should not be baselined for use.

Designated EVA Interfaces:

EVA Tools and Support Equipment

EVA Translation Aids (e.g., CETA Cart, handrails, handholds, etc.)

EVA restraints (foot restraints, tethers, tether points, etc.)

All EVA translation paths (handrails or structure identified for use as a translation path)

All surfaces identified for operating, handling, transfer, or manipulation or hardware

EVA stowage

EVA worksite accommodations (handholds, APFR ingress aids, EVA lights, etc.)

EVA ORU handling and transfer equipment

In designing payload interfaces for gloved-hand operations, compatibility of grasp surfaces must be considered. Conformal or oval handles are easier to grasp than cylindrical shapes; nonskid surfaces are preferred. Integral ribs or splines improve glove-gripping capability. Knurled surfaces which may cause glove abrasion should be avoided. Generally, items to be held or manipulated should be less than two inches in diameter.

2.9 EVA Tool Design

Although the basic selection or design of EVA tools is entirely dependent on the nature of the task, several features are common to all successful EVA tool designs. These features are as follows:

- One-handed operation
- Simplicity in operation
- Grip size suitable for use with a pressurized EVA glove
- Provisions for launch, entry, and temporary in-flight stowage
- Provisions for tethering while in use that satisfy zero-g tool management requirements
- Safety features to protect the EVA crewmember from inherent hazards

Since the functional design of the tool can vary greatly, no attempt is made here to provide more

definitive specifications. Some examples of baselined tools, modified off-the-shelf to satisfy EVA requirements, are included in Figure I.4-8. Figure II.2-16 illustrates the recommended standard EVA tool grip dimensions.

- EVA tool design should concentrate on gross motor motions. The mobility in the upper body of the EMU lends itself to arm movements from either the shoulder or the elbow. Fine motor activity, particularly motions involving the gloved hand and fingers, should be avoided. If required, however, forces should be less than 5 pounds (22.5 N) force, or 40 inch-ounces (0.28 N.m) torque. Examples of motions which are very suitable to EVA are the cycling of a lever (ratcheting a drivescrew) and rotating a rotary actuator (airlock hatch). The likelihood of success of an EVA depends heavily on the workload of the crewmember, and using gross motor skills with relatively low loads is the place to begin; these tasks should require an actuation force of less than 20 pounds (89 N). Fastener torques above 25 foot-pounds (34 N.m) should be avoided. Two hands should never be required for successful tool installation and operation, as all EVA operations are considerably easier when using one hand for additional restraint or position management.

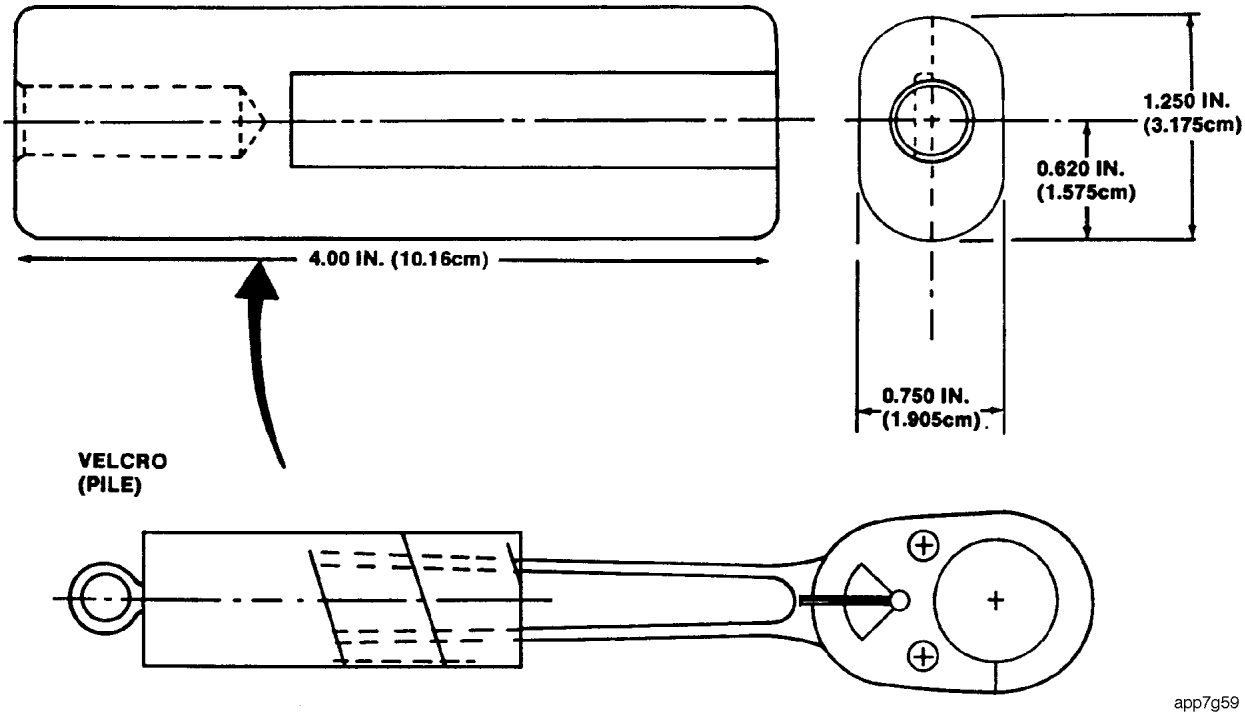

Figure II.2-16.- Recommended EVA tool grip dimensions.

- Power tools must meet the same design requirements as other hand tools regarding operability. Using power tools to accomplish repetitive manual tasks such as disengaging captive fasteners on replaceable modules or operating mechanical drive systems offers enormous returns in reduced crewmember time and effort, and ease of operation.

- Limited space is available in Orbiter middeck lockers for hand tools. Locker dimensions are 17.312 x 9.950 x 20.320 inches (43.97 cm x 25.3 cm x 51.61 cm). Foam cushions cut to size provide restraint and impact/vibration protection.

- If possible, an EVA compatible handle should be incorporated into the mechanism design, or the required tools should be mounted near the worksite on payload hardware to minimize integration problems.

- EVA tools should have no lubricant or should use a lubricant which meets the environmental requirements. Dow-Corning 321R Molycote Spray is an example of a proven lubricant for use on EVA tools. Graphite lubricant should not be used on EVA tools.

- EVA tools should be designed and tested to the operating and stowage environments listed in System Description and Design Data - Thermal, NSTS 07700, Volume XIV, Appendix 2, for thermal properties.

- Additional considerations are:

  - Avoid lift-to-dot snaps for glove operated fasteners

  - Avoid tape

  - Use covers on sharp edge tools for protection when tool is not in use

- Other means to secure loose equipment during EVA include velcro and zippers.

- Tethering provisions during hardware transfer can be accomplished by using existing SSP EVA provisions such as:

  - Tool caddies
  - Tool boards
  - Retractable tethers
  - Bayonet fittings
  - Drop-proof tethering system

2.10 Knobs, Switches, Actuators, and Fasteners

- Knobs, switches, lever and rotary actuators, and connector mate/demate devices should be designed to accommodate low-force, gross motor activity and provide positive stops and/or visual feedback to verify operation and prevent inadvertent selections. Ideally, simple or infrequently used devices should be designed to require force levels that can be satisfied without special restraint systems. Bump guards should be considered to prevent inadvertent actuation of these devices.

- Examples of EVA compatible electrical connectors are shown in Figure II.2-17 (a)-(c).

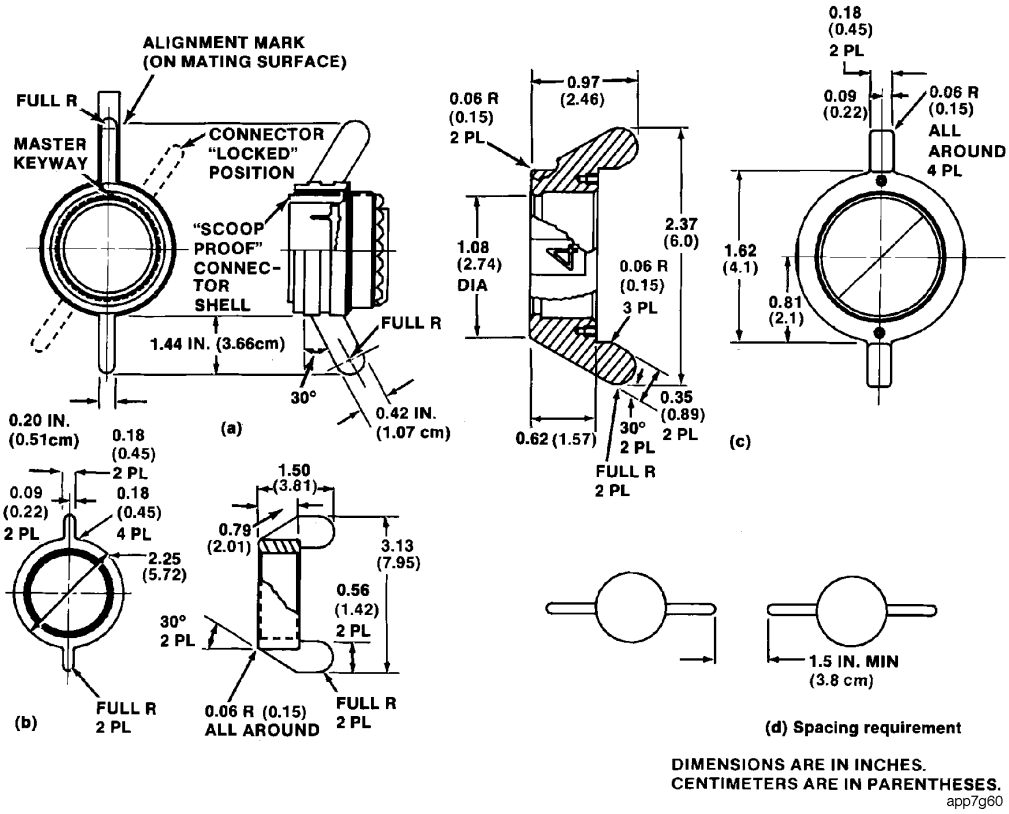

Figure II.2-17.- Connector examples (a-c) and connector spacing requirement (d).

Overall dimensions vary with the design and performance requirements of the particular connector.

- Connectors must be spaced for access as shown in Figure II.2-17 (d).
- Alignment marks are needed for master key positioning.
- Examples of recommended fasteners are shown in Figure II.2-18. Ratchet wrench driven bolts should have a minimum running torque of 24 inch-ounces (0.17 N.m) to operate the ratchet mechanism of the wrench.
- Pip pin fasteners have been used successfully on previous SSP EVA missions. T-handled pip pins designed to be captured when released are the easiest to operate. Pip pins should be sized to be compatible with gloved hand operation.
- Screwdriver-type fasteners such as Phillips, torq-set, or slotted require an axial force for tool grip and operation. Consequently, the screwdrivers used for these types of fasteners tend to back-out and slip. Allen head bolts and double-height hex head bolts are ideal. All fasteners should be captive.

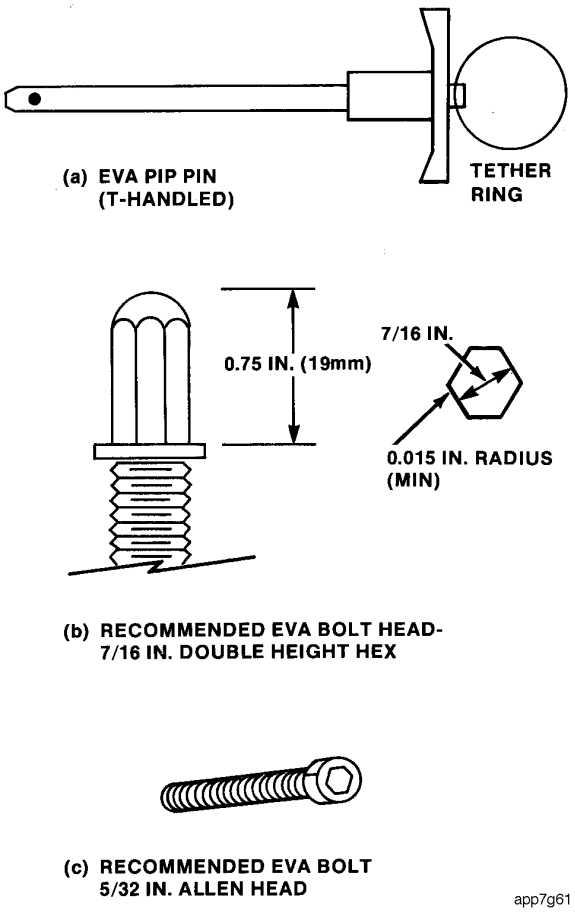

Figure II.2-18.- EVA pip pin and EVA bolt heads.

2.11 Access Doors and Panels

Doors and panels to provide EVA access to payload enclosures should incorporate integral locking/unlocking mechanisms suitable for one-handed operation, incorporate some type of hold-open device, be complemented by a suitably placed handhold for crewmember position maintenance when opening and closing, and incorporate some means of visually verifying proper closing/latching.

Acronyms and Abbreviations

3

AFD	Aft Flight Deck
APFR	Articulating Portable Foot Restraint
ATP	Acceptance Test Plan
Btu	British Thermal Unit(s)
CCC	Contaminant Control Cartridge
CCTV	Closed Circuit Television
CDR	Critical Design Review
CETA	Crew and Equipment Translation Aid
CG	Center of gravity
cm	centimeter(s)
CO_2	carbon dioxide
deg	degree(s)
EMU	extravehicular mobility unit
EVA	extravehicular activity
F	Fahrenheit
FDF	Flight Data File
FED	Federal
FREQ	frequency
FSS	Flight Support Station
ft	foot, feet
ft-c	footcandle(s)
ft-sec	feet-second(s)
g	Acceleration Due to Gravity
hr	hour(s)
HST	Hubble Space Telescope
ICD	Interface Control Document
IDD	Interface Definition Document
in.	inch(es)
IP	Integration Plan
IUS	Inertial Upper Stage
IV	intravehicular
JSC	Lyndon B. Johnson Space Center
K	Kelvin
kg	kilogram(s)
km	kilometer(s)
kN	kilonewton(s)
kPa	kilopascal(s)
kw	kilowatt(s)
lb	pound(s)
lb-sec	pounds-second(s)
LiOH	lithium hydroxide
m	meter(s)
m/sec	meters/second
MAX	maximum
MET	Mission Elapsed Time
MFR	Manipulator Foot Restraint
MHZ	megahertz
MIN	minimum
mm	millimeter(s)
MWS	Mini Workstation
N	Newton(s)
N.m	Newton.meter(s)
NASA	National Aeronautics and Space Administration
NBL	Neutral Buoyancy Lab
N-sec	Newton-second(s)
NSTS	National Space Transportation System
OD	outside diameter
PDR	Preliminary Design Review
PDRS	Payload Deployment and Retrieval System
PFR	Portable Foot Restraint
PGA	Pressure-Garment Assembly
PIP	Payload Integration Plan
PLSS	Primary Life Support Subsystem
PRCB	Program Requirements Change Board
PRD	Payload Retention Device
PSA	Provisions Stowage Assembly
psi	pounds per square inch
psia	pounds per square inch absolute
psid	pounds per square inch differential
RF	radio frequency
RMS	Remote Manipulator System

SCC	standard cubic centimeters
sec	second(s)
SFOM	Shuttle Flight Operations Manual
SIP	Standard Integration Plan
SOP	Secondary Oxygen Pack
SSA	Space Suit Assembly
TDRSS	Tracking and Data Relay Satellite System
TSA	Tool Stowage Assembly
UHF	Ultrahigh Frequency
V	volt(s)
V/m	volt/meter
VCM	Verification Comparison Matrix
W	watt(s)
WETF	Weightless Environment Training Facility
W-hr	watts/hour
XRP	X-ray Polychromator

Bibliography

4

1. JSC 12770, Shuttle Flight Operations Manual, Volume 15, EVA

2. NSTS 07700, Volume XIV, Space Shuttle System Payload Accommodations

3. NSTS 21000-A11, Data Requirements for the Extravehicular Activity Annex

4. NHB 1700.7B, Safety Policy and Requirements for Payloads Using the Space Transportation System (STS)

5. NSTS 13830, Payload Safety Review and Data Submittal Requirements

6. NASA-STD-3000, Man/Systems Integration Standards (MSIS

7. NSTS 21000-IDD-MDK, Shuttle/Payload Interface Definition Document for Middeck Payload Accommodations

8. NSTS 07700, Volume XIV, Appendix 1, System Description and Design Data - Contamination Environment

9. NSTS 07700, Volume XIV, Appendix 8, System Description and Design Data - Payload Deployment and Retrieval System

10. NSTS 14046, Payload Verification Requirements

11. JSC 19450, EMU Systems Training Manual

12. JSC 20466, EVA Catalog Tools and Equipment

13. SFOM Vol 4D: JSC 12770, Shuttle Flight Operations Manual Volume 4D: Television (CCTV)

14. JSC 16908, Weightless Environment Training Facility General Operating Procedures

15. ICD-HSD-3-0045-02-0, Astronaut Boot to Foot Restraint Mechanical Requirements

16. PIP Annex 2: NSTS 21000-A02, Data Requirements for the Flight Planning Annex

17. PIP Annex 3: NSTS 21000-A03, Data Requirements for the Flight Operations Support Annex

18. JSC 17325, Flight Data File, EVA Checklist, All Vehicle