NSTS 07700, Volume XIV,

Appendix 3

System Description and Design Data –

Electrical Power and Avionics

DESCRIPTION OF CHANGES TO

SYSTEM DESCRIPTION AND DESIGN DATA - ELECTRICAL POWER AND AVIONICS
NSTS 07700, VOLUME XIV, APPENDIX 3

CHANGE NO.	DESCRIPTION/AUTHORITY	DATE	PAGES AFFECTED
REV J	Complete revision; replaces and supersedes electrical power and avionics sections to Revision I of NSTS 07700, Volume XIV (reference CR D07700-014-003-01). The following CR's are included: D07700-014-003-02, D07700-014-003-03, D07700-014-003-04.	3/31/88	ALL
1	The following CR's are included: D07700-014-003-05, D07700-014-003-06.	5/17/88	2-4, 2-16
2	The following CR's are included: D07700-014-003-07, D07700-014-003-08, D07700-014-003-09.	6/14/89	Figure 1, 1-2, 7-13, 11-1
REV K	Complete revision; replaces and supersedes REV J (reference CR D07700-014-003-019)	1/5/95	ALL
	Reformat Word for Windows.	7/96	ALL
1	The following CR's are included: D07700-014-003-0020.	9/8/99	vii, 13-3, 18-1
2	The following PRCBD is included: PRCBD S061229	11/9/99	12-6, 13-1, 13-2, 13-6, 18-1
REV L	Complete revision; replaces and supercedes REV K (reference CR D07700-014-003-0021)	3/9/01	ALL
1	The following CR is included: D07700-014-003-0023	11/6/03	1-2, 1-3, 2-4, 4-2, 5-2, 6-2, 7-3, 7-5, 7-8, 7-10, 7-13, 7-14, 7-16, 7-18, 7-21, 8-2, 11-4

Preface

This document is designed to be used in conjunction with the series of documents illustrated in Figure 1. Comprehensive information on the Space Shuttle Program (SSP) electrical power and avionics services is presented herein.

Specific agreements for electrical power and avionics usage must be specified in the individual payload integration plans.

Configuration control of this document will be accomplished through the application of the procedures contained in NSTS 07700, Vol. IV, Configuration Management Requirements, current issue.

Questions and recommendations concerning this document should be addressed to:

Manager, Space Shuttle Customer and Flight Integration
National Aeronautics and Space Administration
Lyndon B. Johnson Space Center
Houston, Texas 77058

Signed by Michele A. Brekke
Michele A. Brekke
Manager
Customer and Flight Integration
Space Shuttle Program

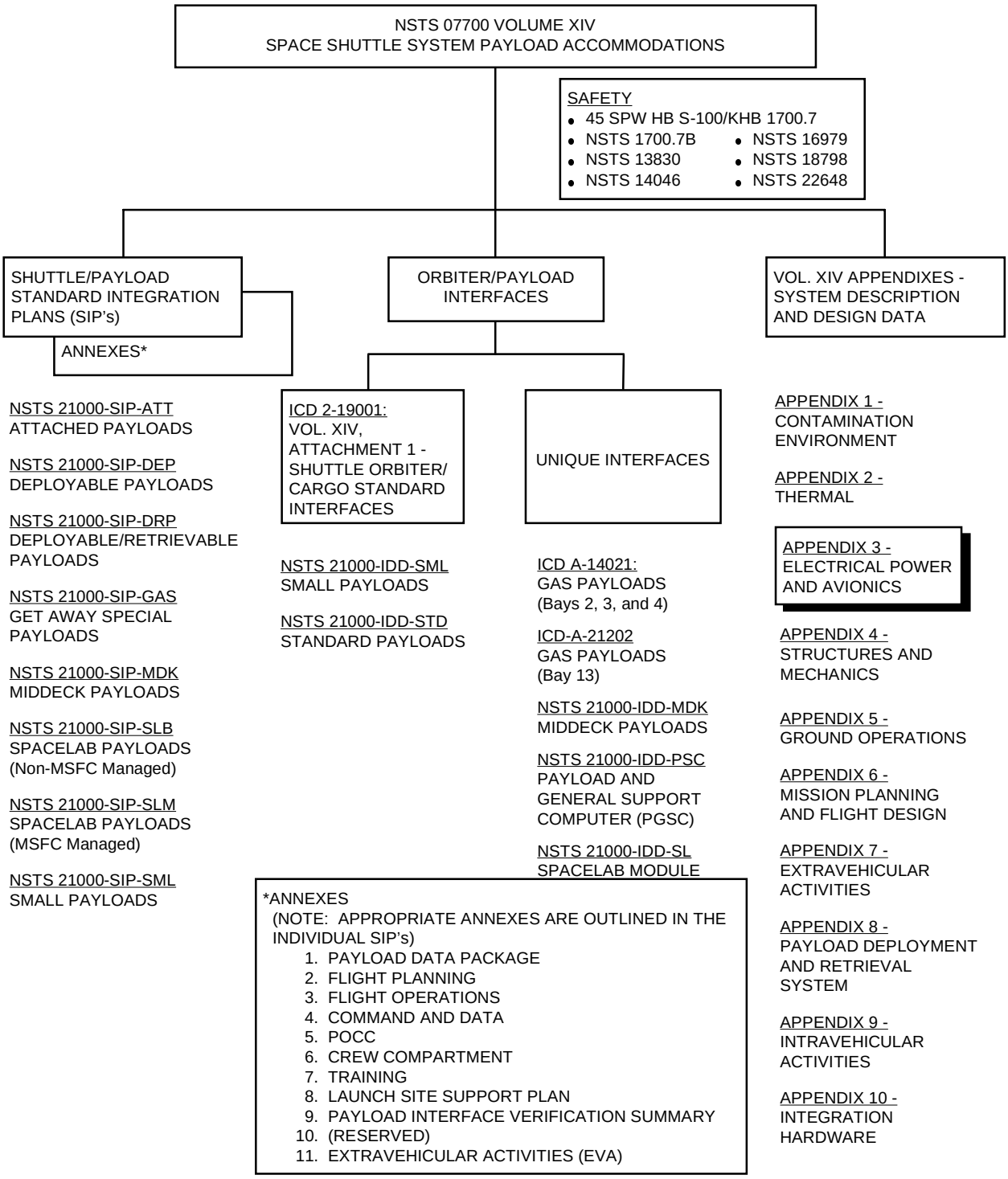

Figure 1.- Space Shuttle customer documentation tree.

Table of Contents

1 - Introduction 1-1

1.1 General 1-1
1.2 Electrical Power and Avionics Accommodations 1-1

2 - Electrical Power for Single Section Payloads 2-1

2.1 Standard Accommodations 2-1

2.1.1 Power Availability 2-1
2.1.2 Voltage 2-5
2.1.3 Emergency Power 2-5
2.1.4 Energy 2-5

2.2 Nonstandard Services 2-5

2.2.1 124 Volt DC Power 2-5
2.2.2 Aft Bus Power 2-5
2.2.3 Auxiliary Direct Current Power 2-5
2.2.4 Alternating Current 2-5
2.2.5 Retention Latch Power 2-6

3 - Single Section Payload Electrical Design, Experience, and Usage 3-1

3.1 Activation and Deactivation 3-1
3.2 Circuit Protection 3-1
3.3 Busing of Power Lines 3-1
3.4 Connector Deadfacing 3-2
3.5 Pyrotechnic Initiation 3-2
3.6 Transients and Ripple 3-2
3.7 Experience and Usage 3-2

3.7.1 On-orbit Power Time Sharing 3-2
3.7.2 T-0 Umbilical Considerations 3-2
3.7.3 Batteries 3-3

3.8 Test and Verification 3-4

4 - Command Services for Single Section Payloads 4-1

4.1 Command Summary 4-1
4.2 Standard Command Services 4-1

4.2.1 Hardwired Commands from the Standard Switch Panel 4-1
4.2.2 Hardwired Multiplexer/Demultiplexer Commands 4-1
4.2.3 Commands Using the Payload Signal Processor 4-3
4.2.4 Commands Using the Payload Interrogator 4-3
4.2.5 Software for Onboard-Initiated Single Commands 4-3

4.2.6 T-0 Umbilical Commands 4-3

5 - Data Processing and Display Standard Services for Single Section Payloads 5-1

5.1 Availability Summary 5-1
5.2 Hardwired Displays from the Standard Switch Panel 5-1
5.3 Hardwired Data and Displays from the Orbiter Multiplexer/Demultiplexer 5-1
5.4 Data and Displays through the Payload Data Interleaver 5-1
5.5 Data and Displays through the Payload Interrogator 5-1
5.6 Data and Displays Through the Payload and General Support Computer 5-3
5.7 Software for Onboard Data Processing 5-3
5.8 Recording 5-3
5.9 Timing 5-3
5.10 T-0 Umbilical Data 5-3

6 - Optional Command and Data Services for Single Section Payloads 6-1

6.1 Additional Services Restrictions 6-1

6.1.1 Onboard Data Processing 6-1
6.1.2 Uplink Commands through the Orbiter Operational Uplink 6-1
6.1.3 Uplink Commands through the Ku-band Forward Link 6-1
6.1.4 Hardwired Commands and Data through the Multiplexer/Demultiplexer 6-1
6.1.5 Commands and Data through the Payload Data Bus 6-1
6.1.6 Deployment Pointing Panel 6-1
6.1.7 Payload Retention Latch Power and Control 6-3
6.1.8 Payload Safing Switches 6-3
6.1.9 Ku-band Signal Processor 6-3
6.1.10 Timing 6-3
6.1.11 Caution and Warning 6-3
6.1.12 Payload Recording 6-3
6.1.13 Video 6-3
6.1.14 Payload and General Support Computer 6-3
6.1.15 Portable Computer System 6-3
6.1.16 Orbiter Interface Unit 6-4

7 - Command and Data System Functional Description 7-1

7.1 Communications Summary 7-1
7.2 Data Processing Subsystem 7-4

7.2.1 General Purpose Computer 7-4
7.2.2 On-orbit Payload Command Processing 7-7
7.2.3 Orbiter-Originated Commands 7-7
7.2.4 Uplink Command Processing 7-9
7.2.5 Payload Data Acquisition and Processing 7-9
7.2.6 General Purpose Computer Data Acquisition 7-9
7.2.7 On-orbit General Purpose Computer Data Processing 7-9
7.2.8 Payload Multiplexer/ Demultiplexer Data Processing 7-11
7.2.9 Customer-provided Bus Terminal Unit Data Processing 7-11
7.2.10 Payload Data Interleaver Data Processing 7-11

7.2.11 Payload Interrogator/ Payload Signal Processor Detached Payload Data Processing 7-11
7.2.12 Ascent and Descent Data Processing 7-11
7.2.13 Orbiter Display System 7-11
7.2.13.1 Multifunction Cathode Ray Tube Display System 7-11
7.2.13.2 Multifunction Electronic Display Subsystem 7-12
7.2.14 Multiplexer/Demultiplexer 7-12
7.2.15 Multiplexer/Demultiplexer Input/Output Modes 7-12

7.3 Orbiter Payload Data Bus 7-12
7.4 Pulse Code Modulation Master Unit 7-15
7.5 Payload Interrogator 7-15
7.6 Payload Signal Processor Commands 7-17
7.7 Payload Signal Processor Telemetry 7-17
7.8 Payload Data Interleaver 7-17
7.9 Ku-band Signal Processor 7-19
7.10 Timing 7-20
7.11 Payload Recorder 7-22
7.12 Payload Retention Panel 7-22
7.13 Aft Flight Deck Payload Unique Panel 7-22
7.14 Standard Switch Panel 7-22
7.15 Deployment Pointing Panel 7-24
7.16 Payload Safing Switches 7-26
7.17 Caution and Warning 7-26

7.17.1 Class 2 Alerts 7-26
7.17.2 Class 3 Alerts 7-26

7.18 Audio Central Control Network 7-27

8 - Single Section Payload Wiring and Harnesses 8-1

8.1 Standard Accommodations 8-1
8.2 Nonstandard Wiring 8-3
8.3 Remotely Operated Electrical Umbilical 8-3
8.4 Payload Power Switching Unit 8-4
8.5 Station Power Distribution Unit 8-4
8.6 Interface Connectors 8-4

9 - Small Payload Accommodations 9-1

9.1 Electrical Power 9-1
9.2 Command and Data Services 9-2

9.2.1 Command and Data System 9-2
9.2.2 Data Processing System 9-2
9.2.3 Small Payload Accommodations Switch Panel 9-2
9.2.4 Payload Signal Processor 9-2
9.2.5 Payload Data Interleaver 9-2
9.2.6 Ku-band Signal Processor 9-4
9.2.7 Timing 9-4
9.3 Wiring and Harnesses for Small Payloads 9-4

9.4 Test and Verification 9-4
9.5 Get-Away Special Payloads 9-5

10 - Middeck Payload Accommodations 10-1

10.1 Electrical Power 10-1
10.2 Command and Monitoring 10-1
10.3 Test and Verification 10-1

11 - Video 11-1

11.1 Accommodations Summary 11-1

11.1.1 Closed Circuit Television 11-1
11.1.2 Split-Screen Video 11-1
11.1.3 Video Control and Signals 11-1
11.1.4 Video Recording 11-1
11.1.5 Video Processing Unit 11-1

12 - Electromagnetic Compatibility Effects and Requirements 12-1

12.1 Environments 12-1
12.2 Electromagnetic Compatibility Tailoring 12-1
12.3 Conducted Emissions 12-3

12.3.1 Ripple 12-3
12.3.2 Transients 12-3

12.4 Intentional Space Shuttle Radiated Emissions 12-3
12.5 Unintentional Space Shuttle Radiated Emissions 12-4
12.6 Payload-Radiated Emissions 12-4
12.7 Broadband Electric Field Emissions 12-4
12.8 Narrowband Electric Field Emissions 12-4
12.9 Alternating Current Magnetic Fields 12-5
12.10 Cargo Susceptibility 12-5
12.11 Interface Cable Classifications and Routing 12-5

12.11.1 Orbiter Wire Treatment, Bundling Electromagnetic Compatibility Classification and Separation 12-5
12.11.2 Payload Requirements 12-5

12.12 T-0 Umbilical and Payload Ground Support Equip-ment Requirements 12-5

12.12.1 T-0 Signal Grounding and Isolation Requirements 12-5
12.12.2 T-0 Radiated and Conducted Emission Requirements 12-5

12.13 Electroexplosive Devices 12-5
12.14 Bonding Overview 12-6

12.14.1 Class C, Current Path Return or Fault Current Bonding 12-6
12.14.2 Class R, Radio Frequency Potential Bonding 12-6
12.14.3 Class S, Static Bonding 12-6

12.15 Wire Shielding 12-6

12.15.1 Low-Level (0 to 5 Volts) Single-Ended Analog Circuits 12-6
12.15.2 Low-Level (0 to 5 Volts) Analog Differential and Discrete Signals 12-6
12.15.3 High-Level (28 Volts) Commands and Discretes 12-6
12.15.4 Radio Frequency Signal Circuits 12-7

13 - Electromagnetic Compatiblity Services 13-1

13.1 Electromagnetic Compatiblity Assessments 13-1
13.2 Beat Frequency and Field Strength Analysis 13-1

13.2.1 Payload Transmitter, Receiver, and Antenna Data Input 13-1
13.2.2 Launch and Landing Radio Frequency Environment 13-2
13.2.3 Data Processing and Review 13-2
13.2.4 Interpayload Field Strength Exposure Matrix 13-2
13.2.5 Payload Ground Radiation Constraints 13-2
13.2.6 Launch Complex Combined Magnetic Field Survey 13-2
13.2.7 Payload Hazard Report Reviews for Safety 13-2

13.3 Payload Electromagnetic Compatibility Test Reports 13-3

13.3.1 Waivers 13-3

13.4 Electrostatic Discharge 13-3

13.4.1 Static Bonding 13-3
13.4.2 Arc Discharges Triggering Explosive Gases 13-4
13.4.3 Thermal Blankets 13-4
13.4.4 Purge Air 13-5
13.4.5 Articulating Joints 13-5
13.4.6 Temporary Structures 13-5
13.4.7 Beta Cloth 13-5

13.5 Lighting 13-5
13.6 Electromagnetic Compatibility Provisions 13-6

13.6.1 Bridge and Trunnion Latches 13-6
13.6.2 Keel Latch 13-6
13.6.3 Adaptive Payload Carrier 13-6
13.6.4 Standard Mixed Cargo Harness 13-6
13.6.5 Additional Bonding Jumpers 13-6
13.6.6 Special Cables 13-6
13.6.7 Get-Away Special Electromagnetic Compatibility 13-6
13.6.8 Special Power Line Extensions and Filters 13-6
13.6.9 Electromagnetic Compatibility Testing of Middeck Payloads 13-6

13.7 Laser and Laser Systems 13-7

13.7.1 Laser Maximum Permissible Exposure from Payloads 13-7

14 - Ground Systems 14-1

14.1 Communications 14-1

14.1.1 Space Tracking and Data Network 14-1
14.1.2 Tracking and Data Relay Satellite System 14-1

14.2 Mission Control Center-Houston 14-1

14.2.1 Communications Interface System 14-3
14.2.2 Data Computation Complex 14-3
14.2.3 Display and Control System 14-3

14.3 Payload Operations Control Centers 14-3

14.3.1 Telemetry 14-3
14.3.2 Commands 14-3
14.3.3 Remote Payload Operation Control Center Interfaces 14-4

15 - Payload Safety 15-1

15.1 Requirements 15-1

15.1.1 Fault Tolerance 15-1
15.1.2 Payload Safety Process 15-1
15.1.3 General Electrical Systems Requirements 15-2
15.1.4 Safety Critical Power 15-2
15.1.5 Conditional Single Fault Tolerant services 15-2
15.1.6 Orbiter Services Fault Tolerant 15-3
15.1.7 Verification of Hazard Controls 15-4
15.1.8 Smart Shorts of Power Lines 15-4
15.1.9 Wire Protection Criteria 15-4
15.1.10 Inadvertent Release of Fluids 15-4

16 - Acronyms and Abbreviations 16-1

17 - Glossary 17-1

18 - Bibliography 18-1

Tables

7-I KUSP DOWNLINK MODES 7-20
8-I SPECIFICATION 40M38277 CONNECTOR CORRELATION DATA 8-5
8-II SPECIFICATION 40M39569 CONNECTOR CORRELATION DATA 8-6
8-III ROCKWELL MC AND ME SPECIFICATION CONNECTOR CORRELATION DATA 8-6
8-IV SPECIFICATION 40M39569 CONNECTOR CORRELATION DATA 8-6

Figures

1-1 Functional block diagram of on-board data flow 1-2
1-2 SMCH provisioning - single cargo element 1-3
2-1 Orbiter main dc power distribution to the payload bay 2-2
2-2 Payload bay optional power interfaces 2-3
2-3 Orbiter dc power distribution to the aft flight deck and payload bay 2-4
3-1 Fusing example of multiple-wire power bus 3-3
3-2 Voltage reduction due to pyrotechnic fusing 3-3
4-1 Single section standard payload command data flow 4-2
4-2 Standard switch panel 4-3
5-1 Single section standard telemetry services data flow 5-2
6-1 Optional command services data flow 6-2
7-1 Shuttle communications links 7-2
7-2 Payload command flow 7-3
7-3 Payload telemetry data flow 7-5
7-4 Data processing system 7-6
7-5 On-orbit payload command data flow 7-8
7-6 On-orbit payload data acquisition data flow 7-10
7-7 On-orbit crew-initiated MDM discrete command 7-13
7-8 On-orbit MDM data acquisition 7-14
7-9 On-orbit PI/PSP telemetry data flow 7-16
7-10 On-orbit PSP command data flow 7-18
7-11 Ku-band signal processor 7-21
7-12 Payload retention panel 7-23
7-13 Orbiter payload physical interface locations - aft flight deck 7-24
7-14 Optional telemetry services data flow 7-25
7-15 Deployment pointing panel front panel layout 7-26
7-16 Payload safing switches 7-27
7-17 Functional diagram, caution and warning system 7-28
7-18 Caution and Warning Panel F7 annunciator matrix 7-28
8-1 Standard interface panel 8-1
8-2 Standard mixed cargo harness (SMCH) for a single section 8-2
8-3 Remotely operated electrical umbilical (ROEU) 8-3
9-1 Small payload accommodations 9-3
9-2 Adaptor beam connector panel electrical interface 9-4
11-1 Orbiter video accommodations (Proposed) 11-3
11-2 VPU overview 11-4
12-1 Maximum allowable electric field intensity versus frequency impinging on space shuttle during launch and landing 12-2
12-2 Orbiter antennas 12-2
14-1 Coverage capability of TDRSS 14-2
14-2 Flow diagram of ground communications 14-2
14-3 Mission Control Center-Houston 14-3

Introduction

1

1.1 General

This document provides useful information for utilizing Space Shuttle electrical power and avionics services to assist Space Shuttle customers in designing payload-to-orbiter interfaces. Payload accommodations have been organized to afford sharing of avionics services among payloads on a flight.

1.2 Electrical Power and Avionics Accommodations

The orbiter avionics system supports payload command, data, telemetry and electrical power interfaces. Figure 1-1 is a functional block diagram of the orbiter avionics accommodations for payloads. Availability of orbiter avionics resources for a specific payload is affected by mission phase and the mixed cargo or dedicated payload accommodation policy.

The standard mixed cargo harness (SMCH) provides the primary paths connecting aft flight deck (AFD) power, command, and data interfaces to the standard mix of four major payloads in the payload bay. Accommodations provided through the SMCH may be augmented with additional services. SMCH services to a single cargo element (single section) are summarized in Figure 1-2, which shows a typical payload receiving a complement of services ranging from simple toggle-switch commands and on-off indicators to orbiter avionics command and data interfaces. This complement provides the best power available on the orbiter (highest current capacity, least noise, most failure tolerance). Using standard services to achieve payload mission requirements maximizes payload compatibility with other cargo elements and the probability of manifest/launch at the desired time.

A second and more limited category of services is provided to a class of payloads called small payloads. These payloads are generally smaller in physical size, require less in mission requirements, and therefore, this type of payload has minimal payload interaction with Space Shuttle operations. Services to small payloads include power, ground command and data handling capability, and crew control. These payloads are usually but not necessarily sidewall-mounted near the forward end of the payload bay.

A third category of payload services is provided to payloads mounted or used in the middeck of the crew compartment. The middeck payload services provided here are limited to electrical power.

A fourth category of payload services is provided to payloads mounted in the payload bay in canisters known as Get-Away Special (GAS) canisters. These payloads are assigned to Shuttle flights on a space-available basis. GAS payload services are limited to control and monitoring of three relays within each GAS canister.

Payload accommodations have been organized to aid in equitable sharing of these avionics services among all payloads within a mission cargo manifest. Each customer should try to achieve mission goals while staying within the power, command and data, electromagnetic interference (EMI)/electromagnetic compatibility (EMC), control panels, and harnessing provided as standard for mixed cargo flights.

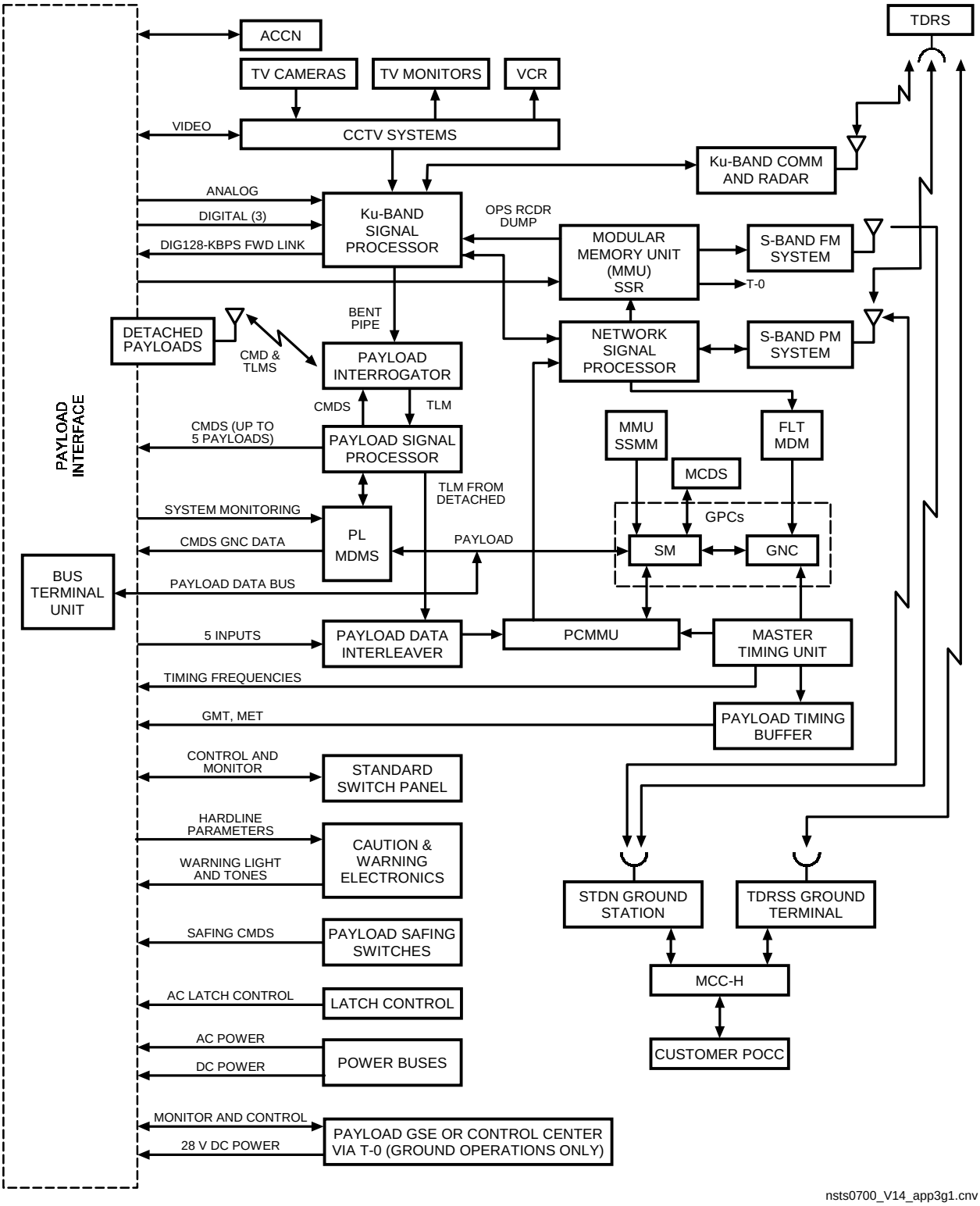

Figure 1-1.- Functional block diagram of on-board data flow.

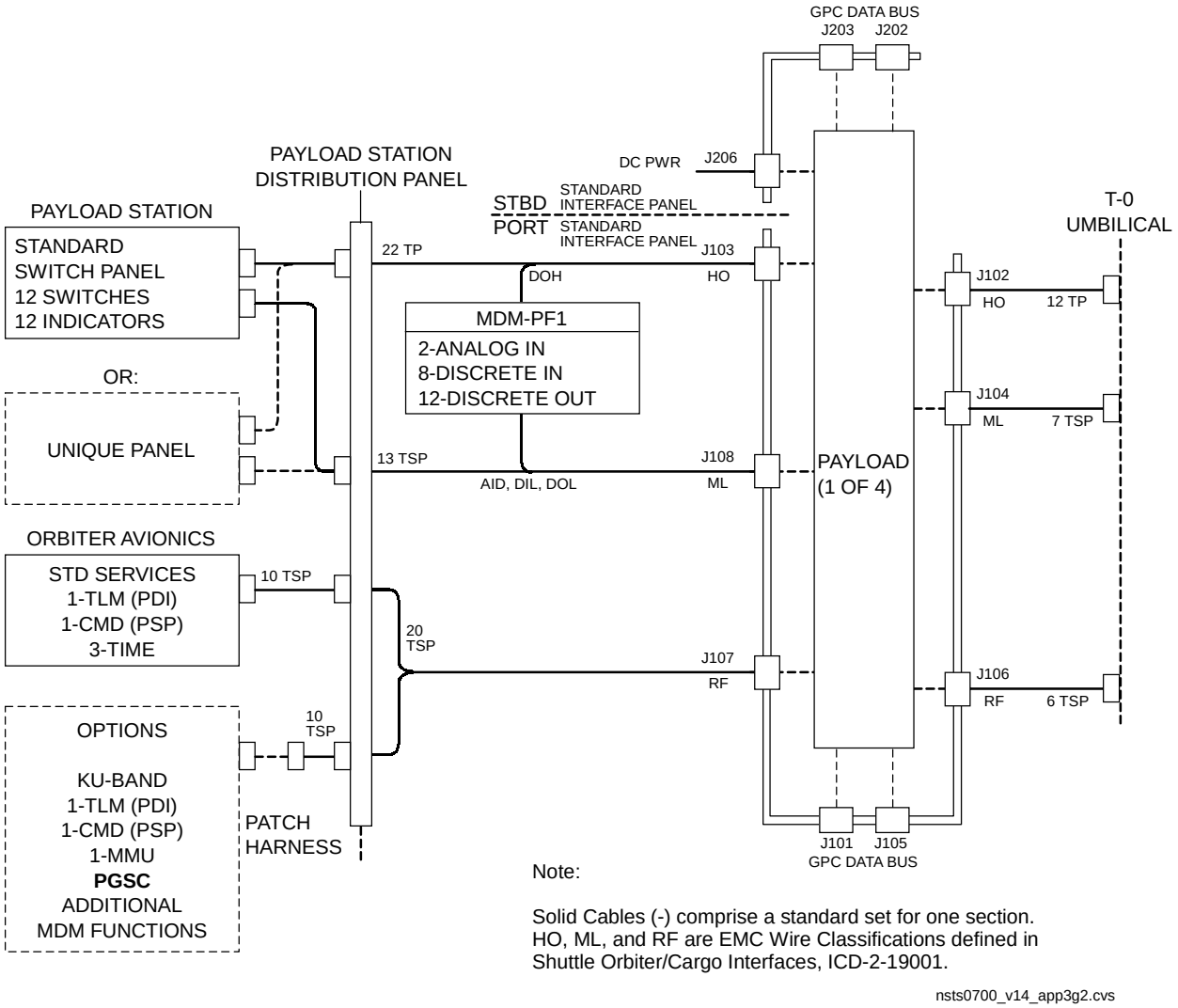

Figure 1-2.- SMCH provisioning - single cargo element.

Electrical Power for Single Section Payloads

2

2.1 Standard Accommodations

The orbiter electrical power distribution system (EPDS) is a multiple source system consisting of three independent fuel cell power plants which consume hydrogen and oxygen to generate electrical energy. The electrical output of each fuel cell is connected to one of three orbiter main direct current (dc) buses (fuel cells 1, 2, and 3 are connected to main buses A, B, and C, respectively.) While main buses operate independently from each other, source redundancy is achieved by cross-strapping the main buses so that loads can be transferred from one fuel cell to another if one fails. In some cases, loads are diode isolated so that if demand is high on one fuel cell, loads will be automatically transferred to another power plant. This transfer maintains a balance of loads between fuel cells which helps maintain an adequate output terminal voltage level. Primary payload power is usually provided from main bus C or from main buses B and C tied together, in parallel with orbiter loads. (See Figure 2-1.)

Primary payload dc power is available at a payload dedicated standard interface panel mounted adjacent to the payload on the starboard side of the payload bay. Additional dc power can be provided for safety related requirements from auxiliary buses. Dc power can also be supplied from the aft end of the payload bay at station X_0 1203. Alternating current (ac) power can be provided at station X_0 603 (starboard) and, for short-term use, from outlets located at each of the sill longeron payload retention system interfaces, 12 port and 12 starboard. These optional power interfaces are shown in Figure 2-2. See section 2.2 of this document for additional electrical power nonstandard services.

In the AFD, a limited amount of ac and dc electrical power can be provided at the mission station distribution panel (MSDP) and the payload station distribution panel (PSDP). Dc power (only) can be provided at the on-orbit station distribution panel (OOSDP). See Figure 2-3 for orbiter dc power distribution to the aft flight deck and payload bay.

Only primary payload dc power in the payload bay, cabin bus power in the AFD, and power from the middeck utility outlets are provided as standard services. Other power sources are available as optional services.

Distribution of main dc power (designated as primary payload power) to payload bay payloads is shown in Figure 2-1. Interface requirements, specific capabilities, and characteristics of the orbiter EPDS are defined in Shuttle Orbiter/Cargo Standard Interfaces, Interface Control Document (ICD) 2-19001 and in Shuttle/International Space Station Interface Definition Document, NSTS 21000-IDD-ISS.

2.1.1 Power Availability

Twenty-eight volt DC electrical power is available to payloads during all mission phases, but usage is restricted during periods when orbiter demand is high. Maximum continuous is the power at that level drawn by a payload when operating in it highest power consuming mode for periods of time generally longer than the peak power operating time limits as defined in ICD 2-19001. Peak power consumption is limited in duration because of orbiter thermal considerations and fuel cell limitations. During prelaunch, ascent, descent, and postlanding, each payload is allocated 650 watts (W) maximum in the payload bay and, if passively cooled, 100 W maximum in the AFD.

During orbital operations, each payload may draw up to 1.75 kilowatts (kW) maximum continuous and 3.0 kW peak of total power. However, up to 2,000 watts maximum continuous may be allocated to a payload from the primary payload bus only if there is a corresponding decrease from other allocated power sources for that payload.

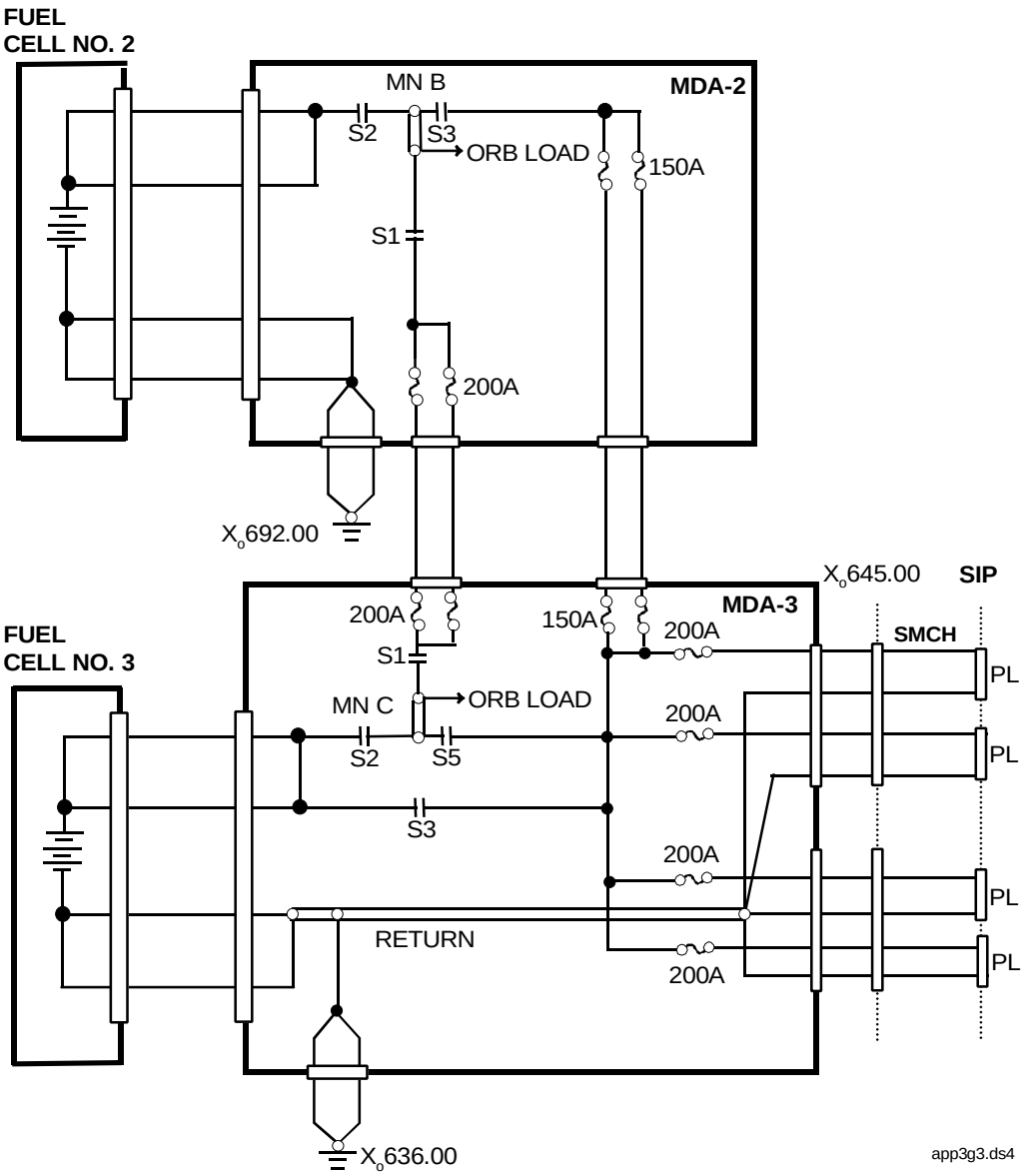

Figure 2-1.- Orbiter main dc power distribution to the payload bay.

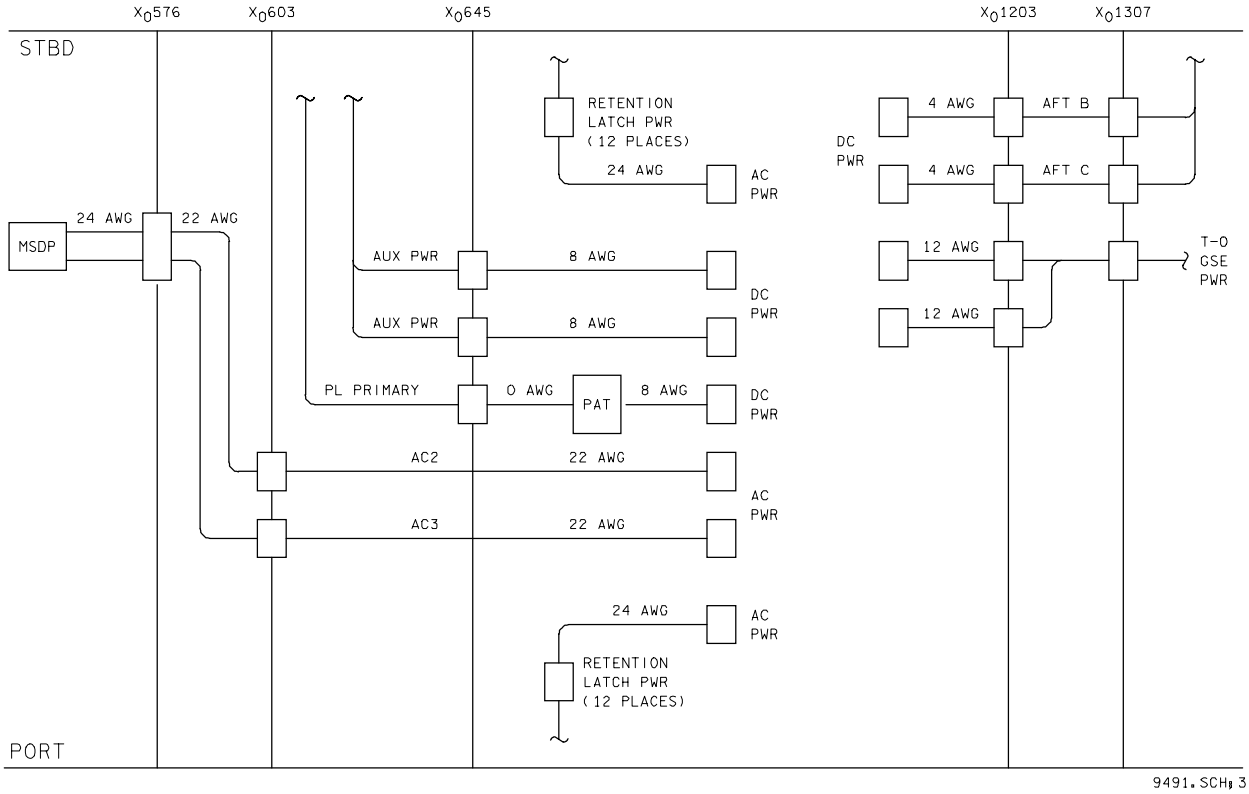

Figure 2-2.- Payload bay optional power interfaces.

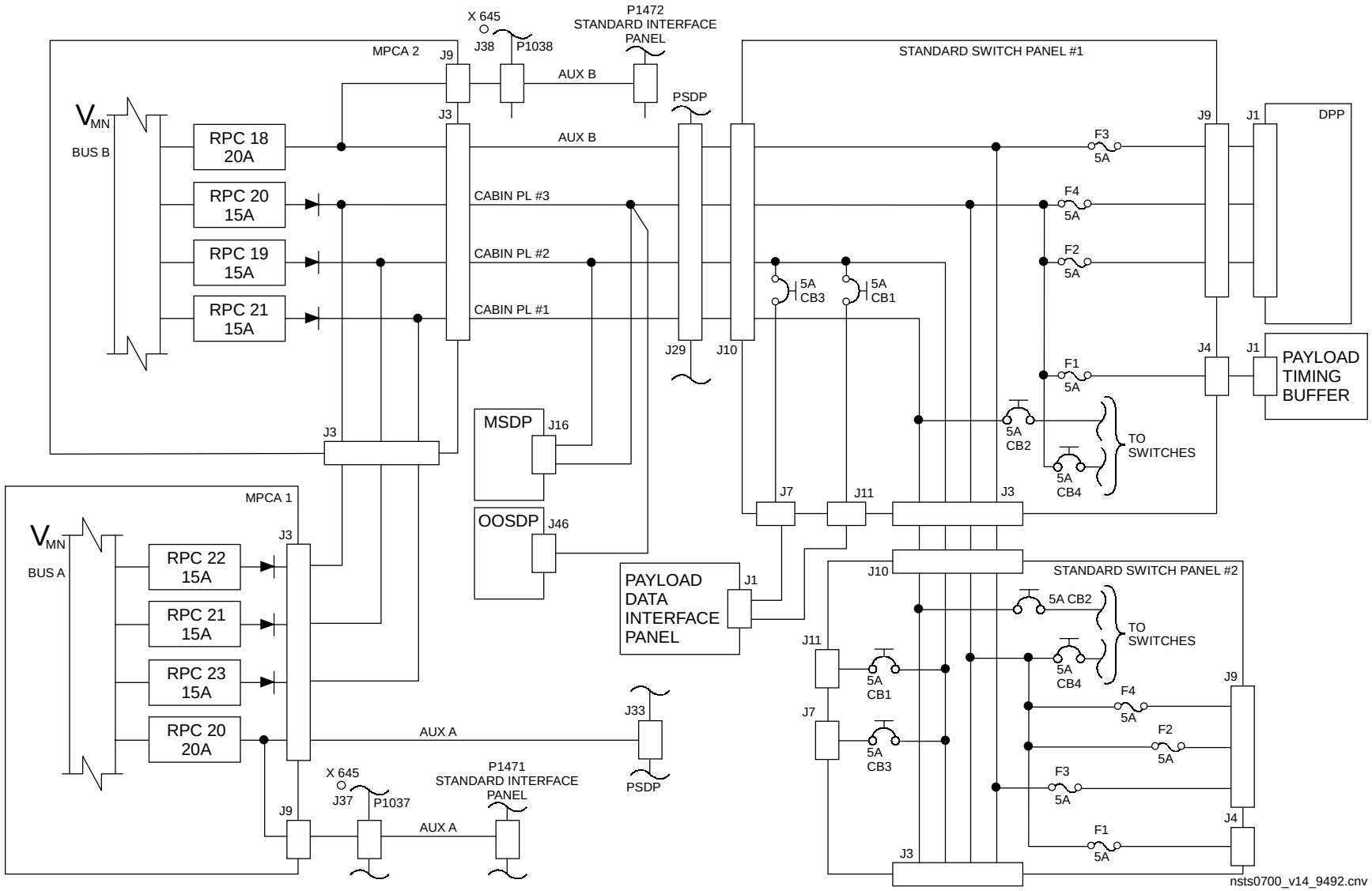

Figure 2-3.- Orbiter dc power distribution to the aft flight deck and payload bay.

The on-orbit allocation of 2.0 kW can be provided to payloads during ground operations before payload bay door closure for payload checkout. After payload bay door closure at the launch site, limited power can be provided for special applications such as live specimen maintenance.

Power is available for payload-furnished equipment mounted in the AFD, but is limited by the AFD cooling capability. Maximum Cabin Payload Bus continuous power for each payload combined during the ascent, descent, and postlanding mission phases is 100 W; during orbital and ground operations it is 200 W.

2.1.2 Voltage

Voltage levels are defined at the orbiter/payload interface and depend upon fuel cell output, payload power usage, payload bay temperature, and cable length. Minimum voltage levels are defined in ICD 2-19001 and NSTS 21000-IDD-ISS; customers with payloads requiring voltage levels outside this range should consider dc-to-dc converters.

2.1.3 Emergency Power

Situations may occur when the orbiter can provide only very limited power to payloads (e.g., during loss of orbiter cooling or after a fuel cell failure). If necessary during these situations, power will be temporarily provided to the payload for payload safing. After payload safing, power may be cut off.

2.1.4 Energy

Specific payload energy requirements will be defined in the payload specific integration plan (IP).

2.2 Nonstandard Services

In addition to standard payload electrical power accommodations, alternative electrical power provisions are available to customers. Nonstandard services are not available to all payloads on a flight, and requirements must be negotiated individually and documented in the IP. The accommodations described in paragraphs 2.2.1 through 2.2.5 below are nonstandard services. Maximum power limits for primary payload power in ICD 2-19001, apply to all electrical power allocated to a payload regardless of its source. Therefore, all power required by a payload from alternative sources will reduce the allocated primary payload power by an equal amount. If required, additional consumables can be provided, to increase energy to manifested payloads as a nonstandard service.

2.2.1 124 Volt DC Power

124 volt DC power is available from the Assembly Power Converter Units (APCUs) in the payload bay. This power is available only during on-orbit operations, and is not available during ascent or entry. Interface requirements, specific capabilities, and characteristics of the orbiter APCUs are defined in NSTS 21000-IDD-ISS and APCU ICD, ICD-A-21321.

2.2.2 Aft Bus Power

The orbiter can provide payload dc electrical power from two outlets located at the aft fuselage in the payload bay. These buses are each fused at 80 amperes (A), and each can provide power up to 1500 W during ground operations and on orbit or up to 1000 W for other mission phases as an alternative source, except during ascent when aft payload power is not typically available. The principal problems with these power sources are reduced interface voltage at the payload caused by longer cable runs, and power quality degradation caused by more hydraulic circulation pump transient noise on the aft buses.

2.2.3 Auxiliary Direct Current Power

Auxiliary power is available for payloads requiring a second power source for safety critical operations. Orbiter main buses A and B are the two sources of auxiliary dc power (28 Vdc nominal). Each can provide a maximum of 400 W for payload use, 200 W of which may be used in the AFD. Power may be drawn from either one or both simultaneously. The auxiliary buses may be tied together if diode isolated for "must-work" situations, however the total power is limited to 400 W.

2.2.4 Alternating Current

Three-phase, 400-Hz, 115-Vac electrical power (four wire, wye) is available for payloads except during prelaunch and ascent; Shuttle vehicle

requirements preclude payload allocation during these mission phases. Orbiter ac buses 2 and 3 are the two sources of ac power. Each is protected on the orbiter side of the interface by a three A, three-phase circuit breaker (derated to 2.85 amps), and can provide 690 volt-amperes (VA) for payload use. Ac power is available at the AFD and/or at the starboard standard interface panel in the payload bay. Because of Shuttle vehicle ac power demands, payloads are limited to a total of 1380 VA maximum continuous (2000 VA peak) during orbital and ground operations (time-shared with Shuttle). During descent and postlanding, payloads are limited to 350 VA (420 VA peak).

2.2.5 Retention Latch Power

Orbiter latches for retention and release of deployable payloads require 115 Vac, 3-phase, 400 Hz power for operation. The 28 Vdc excitation voltage is provided for feedback of latch position indications. Electrical connectors providing access to these functions are located at several points along the sill longeron on both sides of the payload bay, and may be employed by the payload.

28 Vdc feedback indications normally signify “latch closed,” “latch open,” and “ready to latch” positions to the orbiter. These are switch closures within each latch which return the 28 Vdc signal to the orbiter indicators. Switches controlling latch operation are located on an AFD panel. With the switch in the “release” position, 115 Vac (A-B-C phase rotation) will be applied to the latch motor until the “latch open” signal is received. This signal will inhibit the ac power to the latch motor, holding the latch in the open position.

With the switch in the “latch” position, 115 Vac (A-C-B phase rotation) is conducted to the latch motor until the “latch closed” signal is received. This signal inhibits ac power to the latch motor, holding the latch in the closed position.

The orbiter has 3 A per phase (derated to 2.85 A) circuit breaker protection. The 28 Vdc logic circuits do not have to be utilized, but may prove useful in controlling power since ac power is not continuously available. Retention system ac power is available only on orbit and when the orbiter is not actively deploying or retrieving any other payload.

Single Section Payload Electrical Design, Experience, and Usage

3

3.1 Activation and Deactivation

The crew must be able to manually interrupt all power supplied to a payload, except for a maximum total current of one amp. In addition, in order to minimize cargo-produced transients, a payload can have no more than 500 W of latched-on power. This means that if a payload's power source is inadvertently interrupted, there shall be no more than a 500 W load on the payload bus during power restoration.

3.2 Circuit Protection

The customer is required to provide circuit protection on the payload side of the interface for wiring located inside manned modules, for safety circuits and, in some cases, to protect orbiter wiring. Properly selected circuit protection devices are defined as those which will not allow wiring to exceed the wire manufacturer's recommended operating temperature limit for wire insulation during any possible circuit loading or fault condition under worst case environmental conditions.

Payload electrical power distribution circuitry shall be designed so that electrical faults will not damage orbiter wiring or present a hazard to the orbiter or crew. Circuit protection devices and wire sizes shall be selected in accordance with Interpretation of NSTS Payload Safety Requirements, NSTS 18798, and incorporated into the payload design in each of the following cases:

a. When orbiter wiring is to be energized from a payload power bus

b. When payload power distribution wiring is located within a crew habitable volume

c. When payload redundant safety critical power is derived from a single approved orbiter source

d. When energized payload power distribution circuits are routed through wire bundles containing circuits which, if energized, would potentially bypass or remove more than one inhibit to a hazardous function

Case b. does not apply to power distribution circuitry inside payload electronics boxes; all other cases apply.

Refer to NSTS 18798 for additional circuit protection device ratings and wire protection criteria.

3.3 Busing of Power Lines

When two wires are tied together at both ends (bused) to carry more current than either is rated for, both wires must be appropriately fused (or equivalent) at the power source end. When three or more wires are bused, each must be appropriately fused (or equivalent) at both ends or the fusing at the power source end must protect the smallest bused wire. For example, a power run of five 12-gauge wires, bused at both ends, would require either one 20-A fuse feeding the input end of the wires or ten 20-A fuses, one at each end of each wire. See Figure 3-1. The reason for the fusing requirement at both ends is as follows: if only one end were fused, a smart short (discussed in paragraph 15.1.8) in a single wire would cause it to be powered by the combined fuses of the remaining wires through the bused connection at the unfused end.

3.4 Connector Deadfacing

To prevent electrical shorts or arcs during ground operations, current flow through any connector pins while mating or demating a connector is not allowed. Crew mating and de-mating of powered connectors is defined on NSTS/ISS 18798.

3.5 Pyrotechnic Initiation

Pyrotechnic initiators are generally used to free deployable payloads. Such initiators shall be current limited to a maximum of 10 A each, when a Payload Power Switching Unit (PPSU) is utilized with a total maximum current of 80 A per initiation (grouped). This restriction is necessary to limit voltage transients on the orbiter bus. The crew must be provided with the capability to shut off all power to an initiator after it has been fired. Typical reduction in the main dc power bus interface voltage at the standard interface panel due to pyrotechnic initiation within the payload is shown in Figure 3-2.

3.6 Transients and Ripple

Orbiter-produced transients and ripple resulting from load switching are subject to the limitations defined in ICD 2-19001, which delineates the maximum transients and ripple to the payload expected from orbiter sources.

3.7 Experience and Usage

Although certain standard power amounts are allocated to a payload, actual power available to a payload at a given time depends on many variables, including payload manifest, mission duration, unique mission attitude requirements (e.g., cold facing), payload power feeder allocation, and orbiter power requirements.

3.7.1 On-orbit Power Time Sharing

On mixed cargo flights, time sharing of peak power levels between payloads may be necessary, depending on payload requirements in a mission manifest.

Longer mission durations reduce the total energy available to payloads since the orbiter consumes more power and energy than payloads. Contingency power and energy requirements must be reserved for the orbiter, and the remaining payloads. For example, if a deployable payload cannot be deployed, additional power/energy is required to ensure payload survival.

Special attitude requirements, especially cold-facing, require more orbiter and payload heater power, which reduces power available for payload operations. Hot-facing attitudes tend to increase the power feeder resistance, and reduce power transfer capability to high power payloads; this is usually not a detriment to mixed payloads.

The single-section 0-gauge feeder can conduct the standard power allocation and maintain an interface voltage of 26.4 V (at 1750 W) at the payload. Higher payload power requirements may require additional power feeds to provide usable interface voltages or enable high power to transfer. A single-section payload can occasionally utilize a second SMCH power feeder, but this requires a unique negotiation with the Space Shuttle Program (SSP), and usually produces manifesting constraints.

3.7.2 T-0 Umbilical Considerations

The T-0 umbilical can maintain a trickle charge to payload batteries independent of orbiter bus power when payload bay doors are open or closed. For payloads requiring primary charging of batteries after installation in the orbiter, the SSP recommends using the orbiter primary payload bus feed over the use of a drag-on power cable, due to the requirement that the payload bay doors must be open when drag-on cables are used. During ground operations a maximum peak power of 3KW is allowed for payload use. Although no orbiter avionics are connected to the payload T-0 umbilicals, the EMC wire classifications and requirements are still applicable because of the length of wire runs where the orbiter and payload T-0 harnesses are bundled together in the orbiter tail section. Any EMI from payload harnesses could interfere with critical monitoring of orbiter health and status prior to launch.

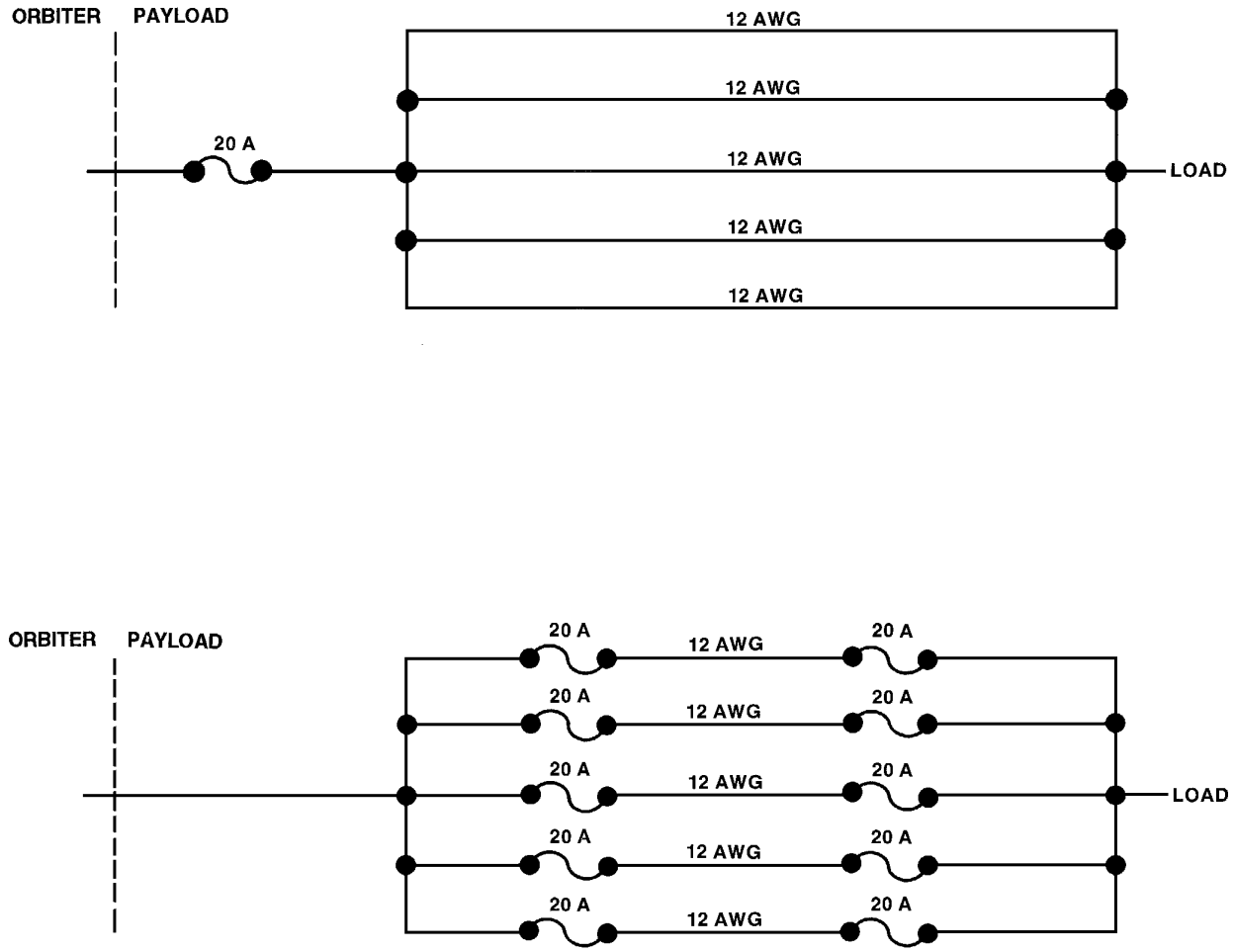

Figure 3-1.- Fusing example of multiple-wire power bus.

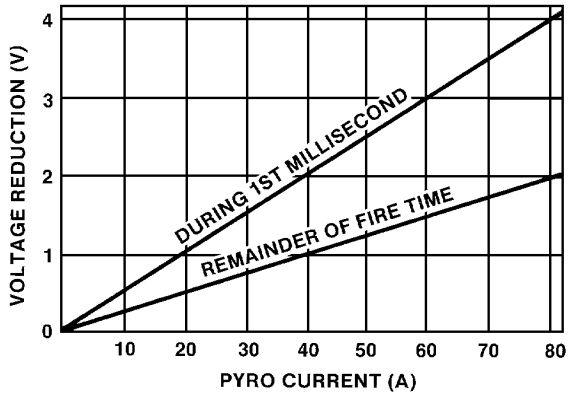

Figure 3-2.- Voltage reduction due to pyrotechnic fusing.

3.7.3 Batteries

If the payload automatically transfers to internal power upon loss of orbiter power, the capability to transfer the payload back to orbiter power after it is restored must be provided by the customer. The crew must be able to isolate the payload from orbiter power and, preferably, power it down during management of orbiter emergencies. See Safety Policy and Requirements for Payloads Using the Space Transportation System, NSTS 1700.7B. Batteries should be designed to support ground operations constraints according to System Description and Design Data - Ground Operations, NSTS 07700, Volume XIV, Appendix 5.

3.8 Test and Verification

Before payload installation, verification of orbiter flight readiness is performed by the SSP, and verification of the payload flight readiness is performed by the customer.

Payload mission kit wiring is installed in the orbiter to provide necessary interfaces for the payloads. Functional testing is conducted at the payload interface to verify that the orbiter is ready to accept the payload. Design verification testing of orbiter subsystems will already have been completed.

A payload undergoes receiving inspection at the launch site, and may require additional stand alone testing. Cargo interface test equipment (CITE) is employed for pre-installation verification that a payload will interface properly with the orbiter. Test and verification requirements will be defined in Payload Verification Requirements, NSTS 14046.

After installation of a payload in the orbiter, an interface verification test is performed to verify all payload interfaces with orbiter flight hardware and software. When required by the customer, an end-to-end test is conducted through the ground network, including the Payload Operations Control Center (POCC), as a nonstandard service. For an end-to-end test of telemetry data flow only, a Pulse Code Modulation Master Unit (PCMMU) data tape (produced during interface verification testing) will be used for Mission Control Center - Houston (MCC-H)/POCC interface validation.

Command Services for Single Section Payloads

4

4.1 Command Summary

A payload may require orbiter and ground communications. The orbiter contains versatile payload-oriented avionics hardware and software, and provides communications links to various ground stations.

The orbiter avionics system supports the following:

- Payload command and data interfaces
- Transfer and/or relay of command data from the Spaceflight Tracking and Data Network (STDN) and Tracking and Data Relay Satellite System (TDRSS) to attached and detached payloads
- Receiving and relaying telemetry data from payloads to corresponding orbiter or payload ground stations

Detailed requirements for data accessed from the payload and commands sent to the payload will be defined in the Command and Data Annex, (PIP Annex 4). Figure 1-1 is a functional block diagram of the shuttle avionics system illustrating onboard data flow. Availability of orbiter avionics resources for a specific payload depends on mission phase and the accommodation policy for mixed cargo or, in the case of dedicated flights, by the policy of the mission manager or other flight coordinating activity. Shuttle/Payload Standard Integration Plan for Deployable/Retrieval-type Payloads, NSTS 21000-SIP-DRP, and Shuttle/Payload Standard Integration Plan for Attached Payloads, NSTS 21000-SIP-ATT, contain summaries of single section command and data services.

4.2 Standard Command Services

Command services for payloads are available from the orbiter and from POCC's through the MCC-H. Ground-initiated commands to attached or detached payloads are transmitted through the orbiter communication system. The crew can initiate commands through the standard switch panel and enter command instructions through the multifunction cathode ray tube (CRT) display system (MCDS) or the multifunction electronic display subsystem (MEDS) keyboard into the orbiter avionics system. Commands are then generated in the form of discrete, analog, or serial digital signals. Standard command data flow is shown in Figure 4-1.

4.2.1 Hardwired Commands from the Standard Switch Panel

Switch closure and/or 28-Vdc commands are provided from the standard switch panel at the payload station on the AFD. The standard switch panel, Figure 4-2, has 12 switches which can be operated while in orbit by the flight crew. Overlay panels identify specific payload functions.

4.2.2 Hardwired Multiplexer/Demultiplexer Commands

Discrete commands are provided at the payload wiring interface by an orbiter multiplexer/ demultiplexer (MDM). Commands are controlled by the orbiter general purpose computer (GPC) in response to keyboard entries from the flight crew or by commands from the MCC-H. Output signals

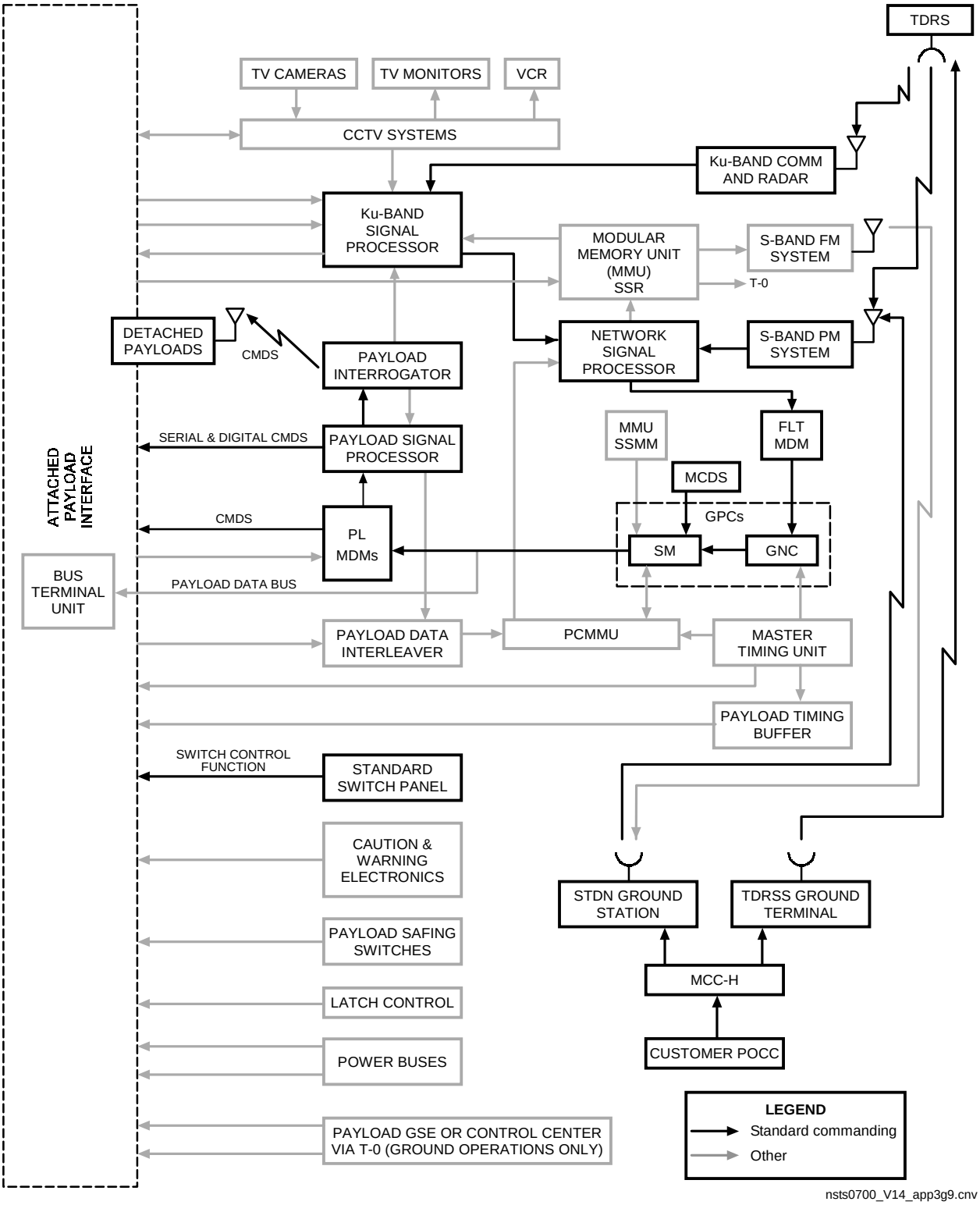

Figure 4-1.- Single section standard payload command data flow.

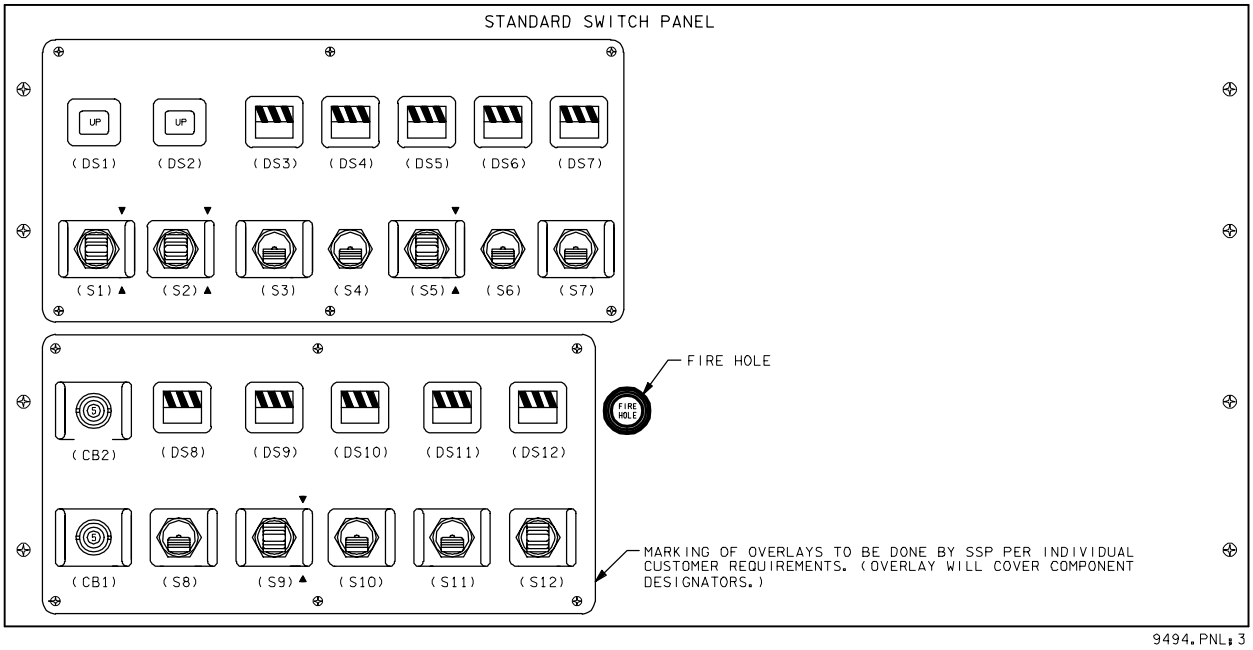

Figure 4-2.- Standard switch panel.

are four discrete, high-level signals (0 to 28 Vdc) and eight discrete, low-level signals (0 to 5 Vdc).

4.2.3 Commands Using the Payload Signal Processor

Serial digital commands to attached payloads are available through the payload signal processor (PSP). These commands can be initiated onboard using the orbiter GPC or at the POCC through MCC-H. MCC-H can forward payload commands initiated at the POCC. Nine specific burst data rates up to 2 kilobits per second (kbps) and three nonreturn-to-zero (NRZ) data codes are available. Acceptable values for the PSP bit rate are defined per ICD 2-19001.

4.2.4 Commands Using the Payload Interrogator

The payload interrogator (PI) supplies an S-band radio frequency (RF) link to command detached payloads which are compatible with either the STDN or Deep Space Network (DSN). Command signals from the PSP through the PI are on a 16-kilohertz (kHz) subcarrier which is phase shift key (PSK) modulated by the baseband command signal. Nine specific burst data rates up to 2000 kbps and three NRZ data codes are available.

4.2.5 Software for Onboard-Initiated Single Commands

The standard onboard command processing capability can initiate 40 single commands through the systems management (SM) GPC. These commands can be issued to a customer-provided bus terminal unit, the orbiter payload MDM, or the PSP (for attached or detached payloads).

4.2.6 T-0 Umbilical Commands

During prelaunch ground operations, T-0 umbilical cabling may be used for commands originating in payload ground support equipment (GSE) or a local payload control center. Launch-critical commands through the T-0 umbilical must be adequately redundant.

Data Processing and Display Standard Services for Single Section Payloads

5

5.1 Availability Summary

Payload data processing and monitoring are available onboard the orbiter, at MCC-H, and at the POCC. Payload telemetry is forwarded by the orbiter communication systems to MCC-H and the POCC. The Tracking and Data Relay Satellite System (TDRSS) provides communications coverage for approximately 94% of each orbit. Standard telemetry service data flow is shown in Figure 5-1.

5.2 Hardwired Displays from the Standard Switch Panel

The standard switch panel provides 12 status indicators (talkbacks), driven by nominal 28-V inputs, which enable the crew to monitor payload status and operation. These indicators are normally used during active crew control of payload operations and are not monitored during crew sleep periods.

5.3 Hardwired Data and Displays from the Orbiter Multiplexer/Demultiplexer

The MDM can receive eight discrete low level signals (0 to 5 Vdc) and two analog differential signals (-5 to +5 Vdc) for onboard data processing or transmission to ground stations.

Analog and discrete payload signals received by the orbiter MDM can be monitored onboard, at the MCC-H, and at the POCC. These signals may be limit sensed by the orbiter GPC so that crewmembers are visually or audibly notified when predetermined limits or conditions are exceeded.

5.4 Data and Displays through the Payload Data Interleaver

Compatible payload telemetry data can be input to the payload data interleaver (PDI) for onboard display and/or forwarding to MCC-H and/or the POCC. During ascent and descent, telemetry may be sent to the ground at a nominal rate of 1.2 kbps per payload.

On orbit, payload telemetry sent to the ground will nominally be limited to 16 kpbs per payload, except during payload deployment. During checkout and deployment, a payload will nominally be limited to 32 kbps for up to 20 minutes while other payloads will be allowed to send telemetry to the ground at a nominal rate of 1.2 kbps each. Onboard processing capability (8-bit words) is also available to provide display and limit sensing for flight crew monitoring and payload operation.

5.5 Data and Displays through the Payload Interrogator

Data from detached payloads is received by the Payload Interrogator (PI)/PSP. The orbiter can process data from the PI/PSP through the PDI for crew display or transmission to ground stations, where it can be forwarded to a POCC. The PI/PSP receives the RF carrier and detects a pulse code modulated/PSK 1.024-megahertz (Mhz) subcarrier. Data is sent to the PSP where the PSK subcarrier is demodulated. After bit and frame synchronization, the PSP transfers telemetry data to the PDI. Payload data can be received at one of five specific rates up to 16 kbps. NRZ and biphase data codes are available.

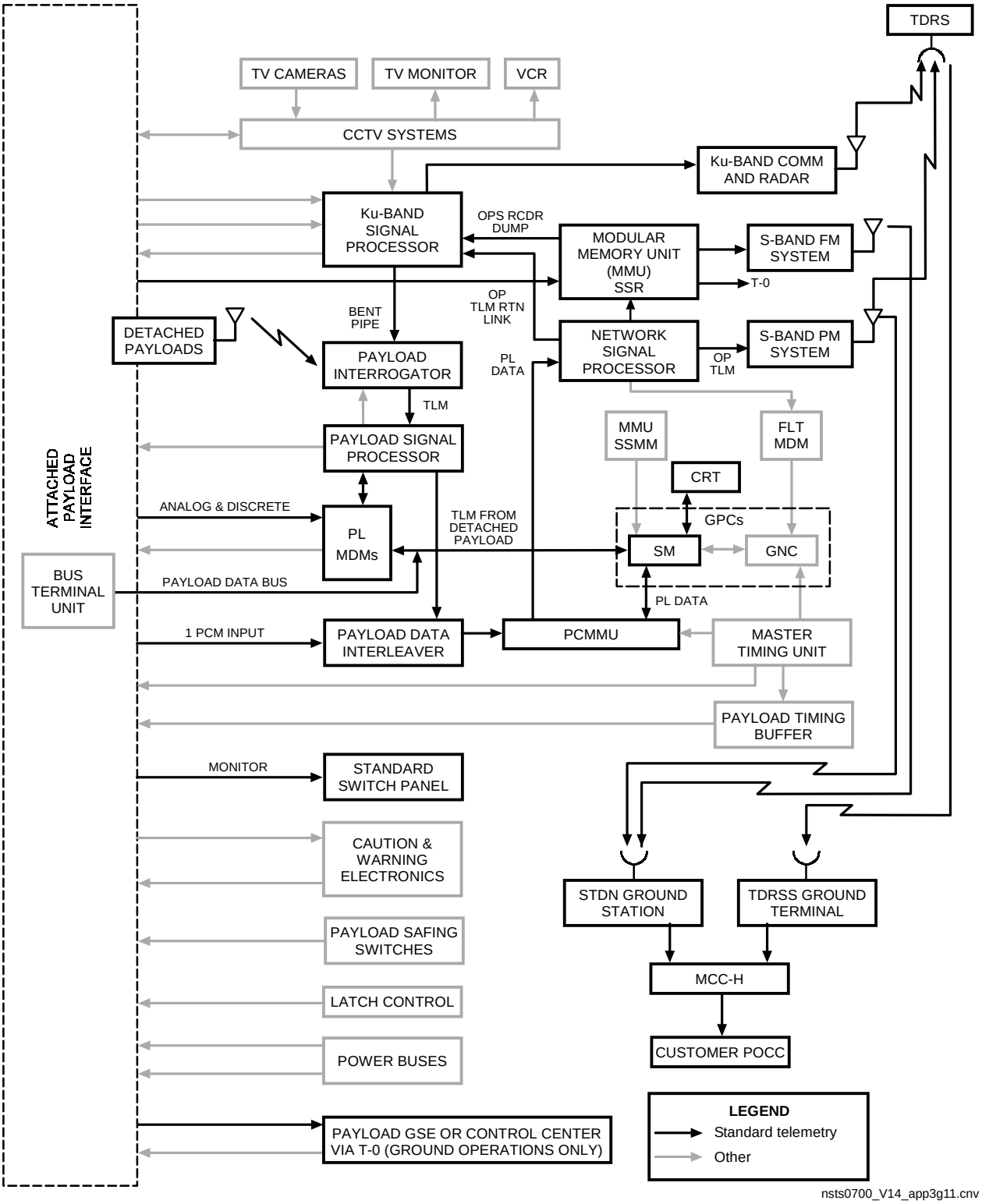

Figure 5-1.- Single section standard telemetry services data flow.

5.6 Data and Displays Through the Payload and General Support Computer

The PGSC interfaces with the payload for data processing and monitoring. Refer to section 6.1.14 for additional PGSC information.

5.7 Software for Onboard Data Processing

Onboard data processing for up to 40 discrete or analog parameters is provided by the orbiter SM GPC. Data may be acquired by the PDI or orbiter payload MDM. Data is displayed to the crew and transmitted to the MCC-H, and/or forwarded to a POCC.

5.8 Recording

Orbiter provides the Modular Memory Unit (MMU), a solid state recorder, for payload use as a nonstandard service. Standard payload recorder accommodation includes four, digital recording inputs. Ten minutes of recording time is available during each of the following mission phases: ascent, descent, and payload deployment. All payloads may record data when the recorder is operating.

The orbiter MMU records orbiter pulse code modulation(PCM) telemetry data (including PDI data) during portions of the flight. Management of this recorder is based on the orbiter data requirement. Recorder playback data can be furnished to the customer in its original format.

5.9 Timing

The standard accommodation includes one mission-elapsed time (MET) signal and two Greenwich mean time (GMT) signals in Interrange Instrumentation Group B (IRIG-B) modified code format.

5.10 T-0 Umbilical Data

The T-0 umbilical can supply data from the payload to payload GSE or the POCC during prelaunch ground operations.

Optional Command and Data Services for Single Section Payloads

6

6.1 Additional Services Restrictions

Some services and accommodations are restricted by orbiter design and are available to a limited number of payloads on each flight. Customer requirements for these additional services are individually defined. Optional command data flow is shown in Figure 6-1, and optional telemetry data flow in Figure 6-1.

6.1.1 Onboard Data Processing

Additional onboard data processing beyond the standard service of 40 commands and 40 data parameters is available. These additional provisions are allocated in blocks of 20 commands or 20 data parameters.

6.1.2 Uplink Commands through the Orbiter Operational Uplink

The MCC-H can store, generate, and transmit payload commands through the orbiter operational uplink and orbiter data processing system. These commands may be transferred to the payload by the PSP, MDM, or customer-provided bus terminal unit connected to the payload data bus.

6.1.3 Uplink Commands through the Ku-band Forward Link

The Orbiter 128 kbps uplink command capability can provide command data to payloads, but must also be time shared to support the orbiter. The PGSC Orbiter Communications Adapter (OCA) port interfaces via Payload Data Interface Panel (PDIP) with the Ku-band 128 kbps fwd link, allowing transfer of computer files between a ground-based computer and a PGSC on board the orbiter. The Ku-band signal processor is described in paragraph 7.9.

6.1.4 Hardwired Commands and Data through the Multiplexer/Demultiplexer

Analog and discrete data inputs, discrete command outputs, and serial input/output (SIO) channels are available as an optional service. The MDM is described in paragraph 7.2.14.

6.1.5 Commands and Data through the Payload Data Bus

Compatible customer-provided bus terminal units (such as MDM's) can be connected to the orbiter GPC payload data bus to provide commands and data acquisition for ground and onboard operations. This enables onboard commanding by the crew through the GPC or operation from a POCC through the MCC-H. Commands can be discrete or serial outputs, and data can be discrete, analog, or serial inputs. Command outputs that can be processed are standard guidance, navigation, and control (GNC) data, discrete outputs, pulsed discrete outputs, analog outputs, and standard serial input/output.

6.1.6 Deployment Pointing Panel

Payload deployment and payload manual pointing capabilities are available using the deployment pointing panel (DPP) in the AFD and a manual pointing controller which operates with the DPP. The DPP is described in paragraph 7.15.

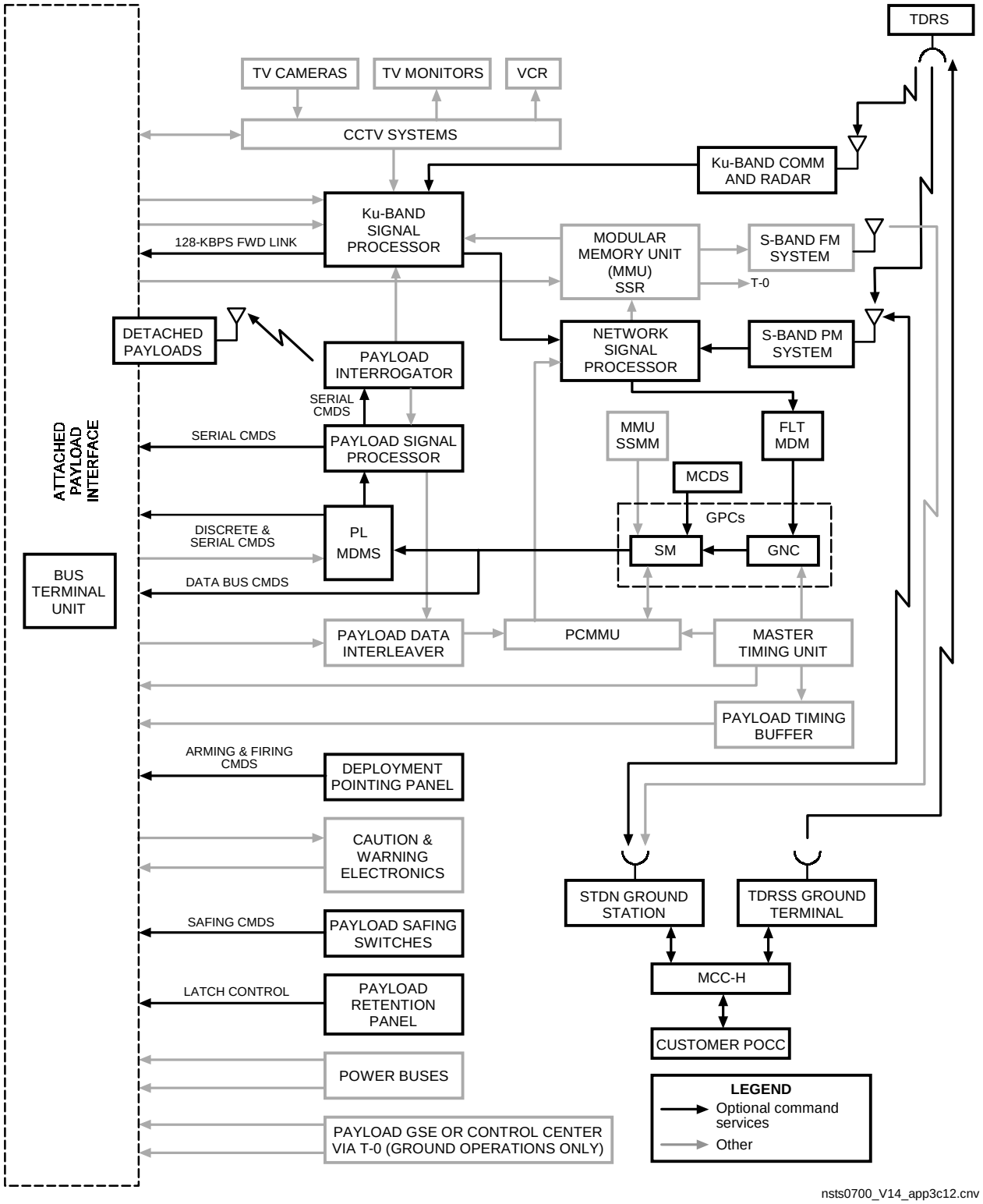

Figure 6-1.- Optional command services data flow.

6.1.7 Payload Retention Latch Power and Control

Control capability and three-phase, 400 Hz, 115 Vac electrical power is available for on-orbit operation of customer-provided payload actuators. Electrical characteristics and control logic must emulate those of the orbiter payload retention latches. The services are available at electrical connectors on the orbiter sill longerons and/or station X_0 603 starboard. Physical interfaces for the interconnecting cabling are defined in the customer ICD. The payload retention panel is described in paragraph 7.12.

6.1.8 Payload Safing Switches

Five safing switches are allocated for active payloads that may require safing in the event of a malfunction. Payload safing switches are described in paragraph 7.16.

6.1.9 Ku-band Signal Processor

The orbiter Ku-band Signal Processor (KUSP) provides direct wideband analog and digital data input channels on a time shared basis during orbital operations. The KUSP is described in paragraph 7.9.

6.1.10 Timing

The orbiter master timing unit (MTU) has several reference frequency square wave signals in addition to the time code signals provided as a standard service. The MTU is described in paragraph 7.10.

6.1.11 Caution and Warning

The orbiter provides audio and visual indications of system malfunctions. The caution and warning system is described in paragraph 7.17.

6.1.12 Payload Recording

Serial digital payload data recording is available at three data rates. The payload data recorder is described in paragraph 7.11.

6.1.13 Video

The orbiter has an onboard closed circuit television (CCTV) system capable of downlinking one 4.2 Mhz video channel. Two onboard color monitors are located in the AFD. Video recording and playback services are available. The CCTV system is described in section 11.0.

6.1.14 Payload and General Support Computer

The SSP can provide a PGSC to support inflight payload operations. The PGSC is a laptop computer that can communicate with payloads in the payload bay using recognized standards. On the AFD the PGSC can be powered from the PDIP or from the Computer Interface Panel (CIP). These panels also provide a data interface to a payload in the cargo bay. Both panels are SSP provided. The SSP can also provide the cables necessary to interface to these AFD panels. The PGSC has different configurations depending on the service required. The PGSC supports several communication standards such as RS-232C, RS-422A, Ethernet. In addition to these standards the PGSC also provides the following:

a. Two-way transfer of data files between a ground-based computer and a PGSC on-board the orbiter. The PGSC OCA port connects to the PDIP for access to the KU-band.

b. Access to the Orbiter Downlink (OD) telemetry via the PCMMU port. Specific PCMMU data may be de-commutated by the PGSC WinDecom software and routed via packetized data to other PGSC's.

c. Two-way transfer of video teleconferencing sessions between a ground-based computer and a PGSC on-board the orbiter.

For more detailed information, see Shuttle/Payload Interface Definition Document for the Payload and General Support Computer (PGSC), NSTS 21000-IDD-760XD.

6.1.15 Portable Computer System

The Portable Computer System (PCS) is provided by the International Space Station (ISS) in support of ISS flights. It provides the MIL-STD-1553B interface between the Space Shuttle and the ISS. For additional information see NSTS-21000-IDD-ISS.

6.1.16 Orbiter Interface Unit

The Orbiter Interface Unit (OIU) is provided by SSP in support of ISS flights. The OIU serves as the data interface device to route information between the Orbiter and elements of the ISS. The information can be commands or telemetry data. If the OIU is not used for ISS flight, other payloads can interface with it, as long as they meet the physical, electrical and protocol standards specified in MIL-STD-1553B. Use of the OIU by other payloads will require appropriate software within the OIU. For more detailed information, see NSTS-21000-IDD-ISS.

Command and Data System Functional Description

7

7.1 Communications Summary

As shown in Figure 7-1, the orbiter provides communications with ground stations either directly or through the TDRSS. The S-band Phase Modulation (PM) downlink transmits voice and telemetry either directly to the ground or through the TDRSS. The S-band PM uplink receives uplink voice and commands either from the ground or through TDRSS.

The Ku-band downlink or return link carries operational telemetry and voice which may be multiplexed with wideband payload digital or analog data, and/or MMU dump. The Ku-band uplink (or forward link) carries operational command and voice plus 128 kbps digital data which may be time shared for payload commands or orbiter text and graphics.

An S-band link provides duplex radio frequency (RF) communications between the Space Shuttle and a detached payload through the PI.

Payload commands to either attached or detached payloads may be uplinked from the ground or initiated on board. Onboard commands are initiated from an MCDS (MEDS) keyboard through the GPC. Uplink commands are initiated from the MCC-H or a POCC, and transmitted by the MCC-H. Uplink commands initiated from the MCC-H are nonstandard services. Payload command flow is shown in Figure 7-2. Additional onboard commands can be initiated from the standard switch panel to an attached payload.

Uplink commands from the operational uplink are transmitted from the ground to the orbiter through the S-band PM link or the Ku-band link. These links must be time shared between payload and orbiter system requirements. Commands are processed through the orbiter data system and sent to attached or detached payloads.

A maximum average information throughput rate of approximately 1 kbps can be sent to a payload when the link is dedicated to that payload. Command data are encoded to 8 kbps and multiplexed with digital voice information for a total uplink of 32 kbps (one 24 kbps digital voice channel used during S-band operations through the TDRSS) or 72 kbps (two 32 kbps digital voice channels used during S-band operations direct with ground or Ku-band operations through TDRSS).

When received at the appropriate orbiter antenna, uplink digital data is routed to the network signal processor (NSP) which separates the data stream into voice and command portions. The NSP decodes the command words and stores them in the NSP input/output (I/O) buffer for transfer to the GPC. Voice channels are directed to the audio distribution system.

Commands can be sent to an attached payload as follows:

- Through MDM discrete or serial I/O channels
- Through customer-provided bus terminal unit discrete, analog, or serial I/O channels
- Through the PSP, one payload at a time

For commands to a single detached payload, command data is routed to the PSP from the payload MDM for processing before forwarding to the PI. The PI will then transmit the command data to the detached payload. For detached nonstandard payload, command data is first routed to a payload-provided unique processor and then sent to the PI for transmission.

For data acquisition, the orbiter can accept analog, discrete, serial digital, and PCM data from attached and detached payloads and process it for telemetry, recording, and/or display.

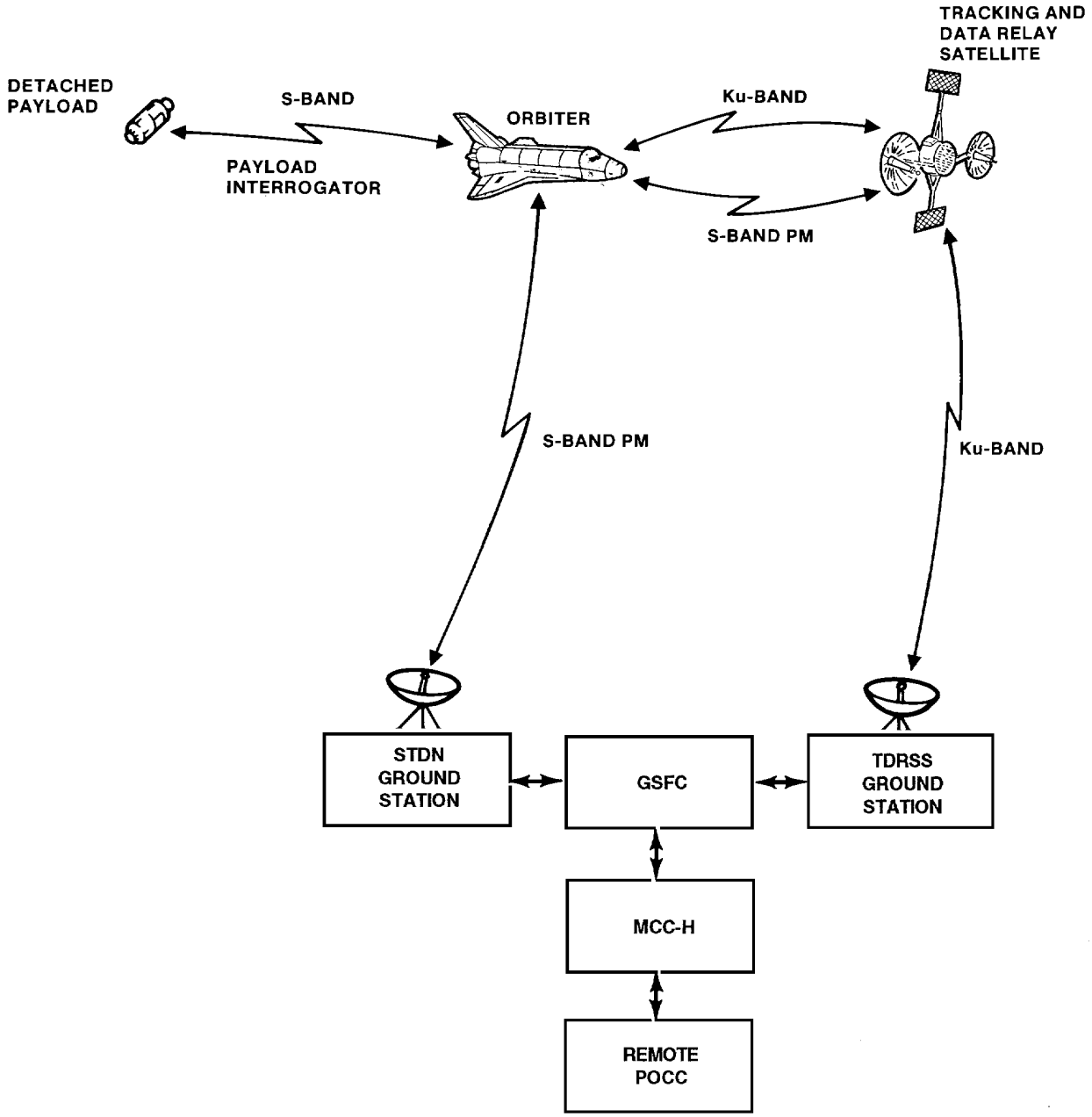

Figure 7-1.- Shuttle communications links.

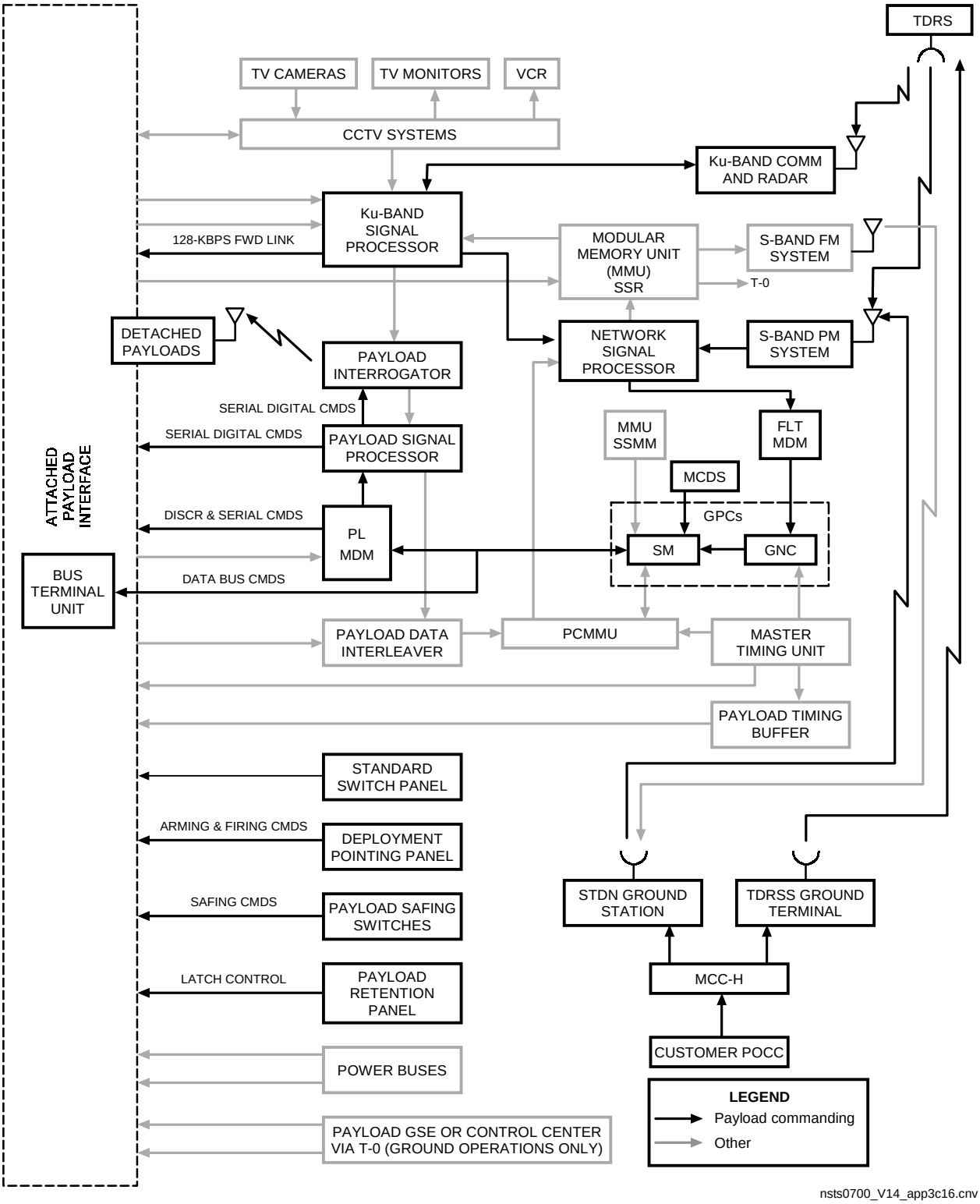

Figure 7-2.- Payload command flow.

Payload telemetry data can be transmitted to the ground by the orbiter S-band PM link or Ku-band link. When a communication link to a ground station or TDRSS is unavailable, some payload data can be recorded on the MMU recorder. Figure 7-3 shows the orbiter payload telemetry data flow.

The PDI can handle four simultaneous input data streams. Detached payload telemetry received by the PI may be routed to the KUSP for bent-pipe transmission to the ground, or routed to the PDI from the PSP. The PSP receives the payload telemetry data from the PI at 16, 8, 4, 2, or 1 kbps, modulated on a 1.024-MHz subcarrier, phase shift keyed in biphase-L, -M, -S or NRZ- L, -M, -S formats. Telemetry data is then demodulated, bit and frame synchronized; and routed to the PDI in NRZ-L format. For attached nonstandard payloads, data bypasses the decommutation and is stored in blocks by the PDI for access by the PCMMU.

The PCMMU has two 128-kbps telemetry data format memories. One is a hard (or fixed) memory (programmable read-only memory (PROM)) of the fusible link type, and the other is a random access memory (RAM) programmable inflight by the SM computer. Only one format memory at a time will be used to generate 128-kbps telemetry output. The PCMMU also has one 64-kbps telemetry data format memory (RAM) programmable inflight by the SM computer. The 64-kbps and 128-kbps telemetry data format memories can operate simultaneously; but only one format is downlinked at a time. The 128-kbps format is normally used on orbit.

The NSP receives clock signals and the 64- and 128-kbps PCM telemetry data streams from the PCMMU, and two analog voice signals from the audio distribution system. The NSP delta modulates one or two analog voice input signals at a 32-kbps rate and time division multiplexes either one voice signal with the 64-kbps PCM telemetry, or two voice signals with 128-kbps PCM telemetry, and converts the time division multiplexed (TDM) signal from NRZ-L to biphase-L for the S-band transponder or KUSP.

When the S-band PM link is used, the S-band carrier is modulated with the operational downlink data and voice for RF transmission to STDN grounds stations (direct or via TDRSS).

If the Ku-band link is used, the Ku-band carrier is modulated with the operational downlink data and voice for RF transmission to MCC-H via TDRSS.

Differentiation between standard and nonstandard services in this section has not been made.

7.2 Data Processing Subsystem

The portion of the orbiter data processing subsystem (DPS) associated with payloads basically consists of five GPC's, two MMU's, two payload MDM's (PF01 and PF02), two PCMMU's, and one MCDS. Figure 7-4 shows the DPS and other equipment and the interconnecting data bus network. The GPC's communicate through a data bus system at a burst rate of one-megabit-per-second (Mbps) in biphase-L format. The data bus system is a half-duplex system under GPC control.

7.2.1 General Purpose Computer

The GPC performs data processing required for guidance, navigation, and control of the orbiter; payload handling and management; and monitoring and control of payloads and orbiter subsystems. Availability of GPC software to support payloads depends on flight, timeline (event), and GPC configuration. GPC software is loaded from the MMU. Various memory configurations are loaded into different GPC's depending on the mission phase. Each configuration has a system software section and an application software section.

Customer requirements are implemented in the application software (specifically, the SM application software on orbit).

During ascent and descent mission phases, four GPC's are loaded with identical GNC application software, which does not support payloads. These GPC's form a redundant set and are commonly referred to as GNC GPC's. The complete software in these GPC's is referred to as the primary avionics software system (PASS). The fifth GPC is loaded with a backup version of the

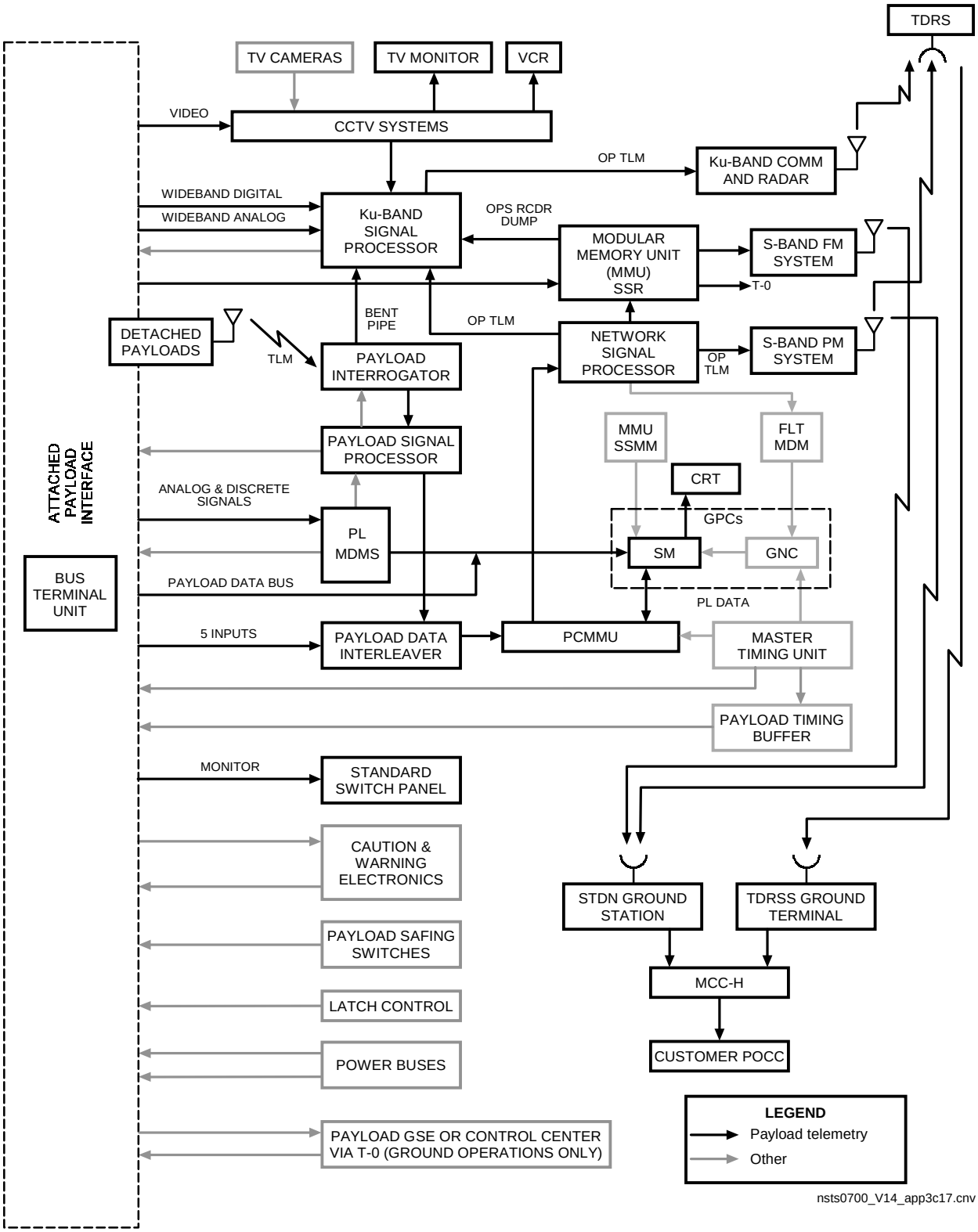

Figure 7-3.- Payload telemetry data flow.

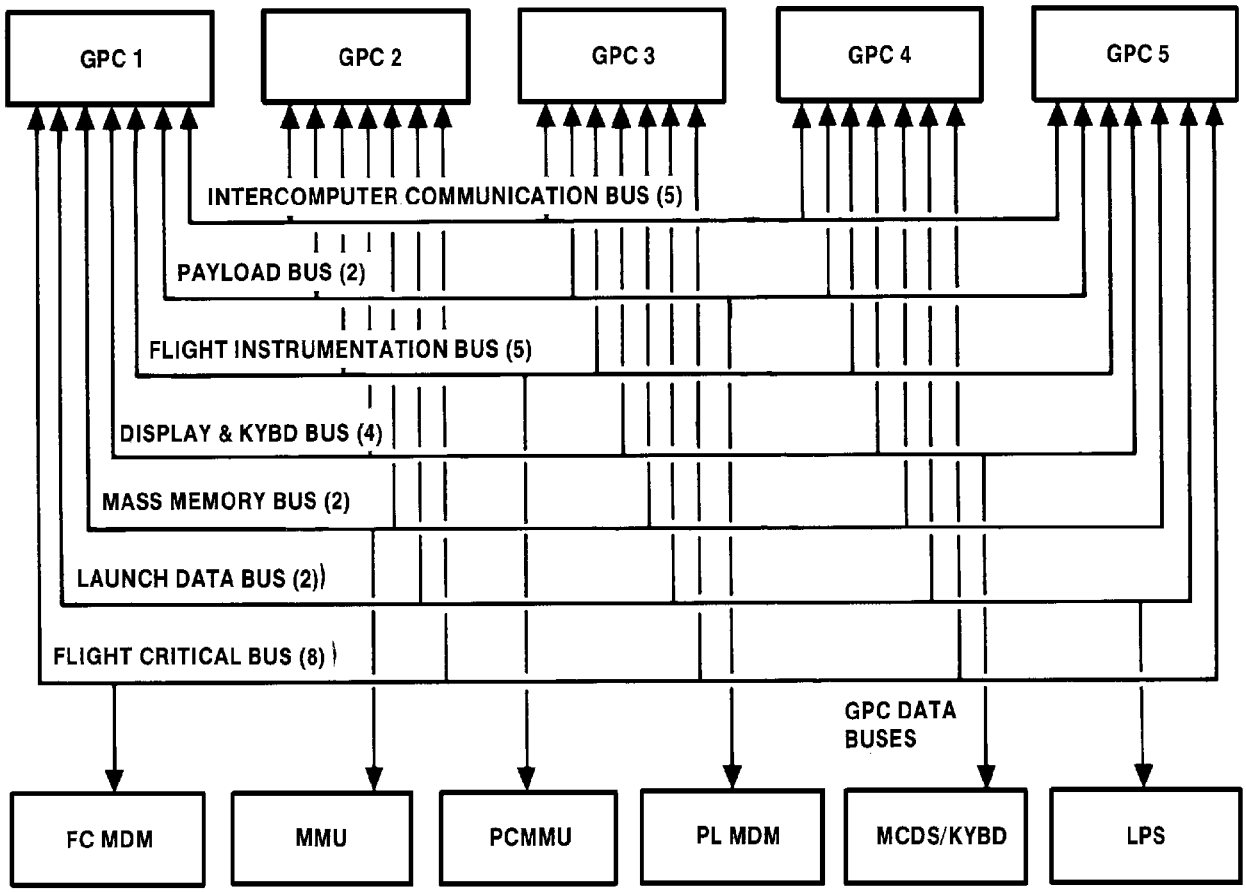

Figure 7-4.- Data processing system.

GNC application software and a limited version of SM software. This GPC and its complete software are commonly referred to as the backup flight system (BFS) GPC and software. BFS software provides limited support to payloads during ascent and descent.

While on orbit, only one or two GNC GPC's are in use. The third GPC is loaded with on-orbit PASS SM applications software which controls payload functions. The fourth GPC contains GNC entry software and is placed in standby mode. The fifth GPC contains the BFS and may be powered down. The two active GNC GPC's form a redundant set. These two GNC GPC's and the SM GPC form a common set. A common set is defined as two or more GPC's with identical system software programs but with different application software programs. Data is exchanged between GPC's in a common set by the intercomputer communication channel (ICC) data buses. For payload support, this includes GNC data and uplink transmissions to the SM GPC. In case of a GPC failure, reconfiguration can compensate for the failed GPC.

The capability of GPC software to support payloads depends on the nature of the flight and the time during the flight. The three flight mission phases are ascent, on-orbit, and descent. GPC software is generally not available for payload use during the prelaunch phase.

Normally, the only GPC software that supports payloads, other than PDI data throughput to the ground during the ascent phase, is the on-orbit SM memory configuration. For a nominal mission, SM is available from approximately 77 minutes after liftoff until approximately 3 hours before entry.

BFS and vehicle utilities/ GNC operational sequence 9 (VU/G9) memory configurations contain limited payload services which are only available when specified in the PIP. BFS is used during ascent/descent, and is installed from approximately L-20 minutes until on orbit when SM is loaded, and from approximately 3 hours before entry through landing. VU/G9 is used during other orbiter prelaunch and postlanding operations.

Prelaunch services are limited as follows:

- Before payload bay door closing, on-orbit SM payload software is provided for payload interface verification testing.
- GPC applications software (called vehicle utility) allows the ground to communicate with payloads utilizing the launch data bus (LDB) interface. This is a limited optional capability which allows the ground to send individual requests to the orbiter GPC for execution. The ground can specify that a resulting response will be transmitted from the LDB. Interfaces supported for data acquisition and commands are PDI/PCMMU, payload MDM's, and payload bus terminal units attached to payload data buses.

Ascent and descent services are limited as follows:

- Data acquisition is limited to discrete and analog parameters.
- Commands during ascent and descent are an optional service limited to MCC-H-initiated uplink discretes only (no crew-initiated commands). Interfaces supported for data acquisition and commands are PDI/PCMMU, payload MDM's, and payload bus terminal units attached to payload data buses.

7.2.2 On-orbit Payload Command Processing

Commands to attached or detached payloads may be uplinked from the ground or initiated on board. Onboard commands are initiated from the MCDS (MEDS) keyboard, or prestored commands may be executed through MCDS (MEDS) keyboard item entry. Uplink commands are initiated from the MCC-H or a POCC through the MCC-H. On-orbit payload command data flow is shown in Figure 7-5.

7.2.3 Orbiter-Originated Commands

Payload control from the orbiter through the SM GPC is normally initiated by the crew in real time. A command may be used to initiate a single discrete command or a prestored command load as in the case of PSP commands.

- Discrete commands to an attached payload through a payload MDM or a customer-supplied bus terminal unit are normally initiated by the crew through MCDS (MEDS) keyboard item entry. Uplink command capability is also available.
- Serial digital commands to an attached payload through a payload MDM SIO channel or customer-supplied bus terminal unit SIO channel are normally initiated by the crew.
- Analog commands to an attached payload through a customer-supplied bus terminal unit are initiated by the crew. The analog value must be entered from the MCDS (MEDS) keyboard.
- PSP prestored program commands are defined before the mission and stored in the GPC for execution by the crew. The PSP is configured according to a configuration message from the GPC. The customer must supply data in hexadecimal form before the mission.
- GNC data transfer commands send orbiter GNC data (state vectors, attitudes, attitude rates) to a payload. GNC data is available in Aries mean of 1950 (M50) or Greenwich true-of-date (GTOD). Data can be transferred from the PSP, MDM SIO, or GPC data bus. For further details, see ICD 2-19001.

GNC data is computed in real time in the GNC GPC and handed off to the SM GPC.

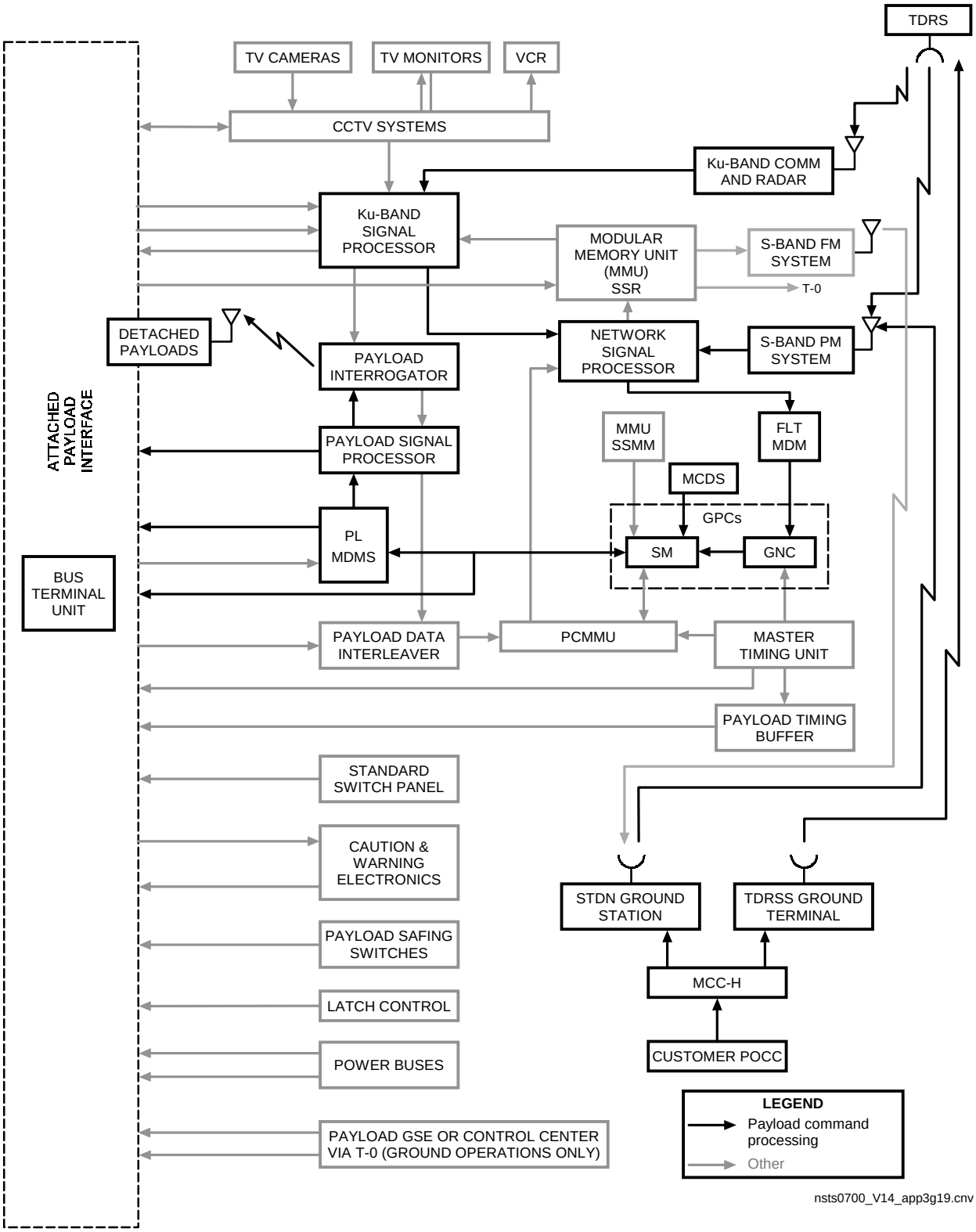

Figure 7-5.- On-orbit payload command data flow.

7.2.4 Uplink Command Processing

Orbiter routing of uplink commands is shown in Figure 7-5. Uplink commands are received from the ground in S-band or Ku-band equipment. In either case, the signal is routed through the NSP to a flight critical MDM and then to a GNC GPC. All uplink commands include a destination. Data is transferred from the GNC GPC to the SM GPC, which processes it to the payload as a single-stage command, two-stage command, stored program command, or time-executed command.

- Single-stage commands are processed by the SM GPC as soon as complete data is received in the two-stage buffer. Unlike two-stage commands, the execute flag is appended to the payload command for single-stage commands. There is no downlist verification of command contents before transmission.

- Two-stage commands are uplinked as a load command and a separate execute command. The load is stored in the two-stage buffer, then downlisted (at 1.04 Hz) to the ground for validation. If the load is ascertained to be correct, an execute command is sent. The load is transferred to its destination within 2 seconds of receiving the execute command.

- Stored program commands (SPC's) are a subset of two-stage commands which allow the execution time to be specified within the command. The GPC software processes the SPC's as is done for two-stage commands; but instead of executing the SPC's upon the reception of an execute command, the commands are stored until the time specified with the command matches the current monitor time. At such time, the command is executed. SPC's are used only for setting or resetting system discretes. A limit of 25 commands can be stored in the GPC.

- Time-Executed Commands (TEC's), like SPC's, are executed at specified times, TEC's send serial commands to a payload through the payload MDM SIO channel that is specified in the TEC, a customer-provided bus terminal unit SIO channel, or PSP. A maximum of 25 TEC's can be stored in the GPC at one time and TEC's may be replaced by uplink commands. A maximum of 64 sixteen-bit words is allowed for each TEC (excluding the GMT of execution) if the destination is the PSP; 32 sixteen-bit words maximum is allowed if the destination is a payload through an optional-service SIO channel of a payload MDM. The maximum rate of TEC execution is one TEC per second.

7.2.5 Payload Data Acquisition and Processing

The GPC can acquire data from payloads and process it for display, fault detection and annunciation, and downlisting. The SM GPC controls telemetry format loads (TFL's) for the PCMMU and decommutation format loads (DFL's) for the PDI. See paragraphs 7.2.15 and 7.8 for further information.

7.2.6 General Purpose Computer Data Acquisition

The SM GPC software can acquire data from a payload telemetry data stream through the orbiter PDI/PCMMU, payload MDM or customer-supplied bus terminal units attached to payload data buses. On-orbit payload data acquisition flow is shown in Figure 7-6.

7.2.7 On-orbit General Purpose Computer Data Processing

The SM GPC software processes acquired payload data, and displays payload subsystem health, performance, and configuration to the crew. Processing capabilities include fault detection and annunciation (FDA), display, and transfer of GPC-acquired data (downlisting) to the PCMMU for inclusion in the operational downlink.

In processing data for the MCDS (MEDS), the GPC will scale analog parameter PCM counts to engineering units for display. Scaling is limited to third-order polynomial equations. The GPC will also convert discrete (binary) parameters to predefined text (e.g., OFF/ON) or symbols.

For FDA, the GPC will detect out-of-limit conditions (limit sensing) for specified payload analog or discrete parameters. Annunciation of out-of-limit conditions is provided by MCDS (MEDS) fault messages, panel lights, and audio tones.

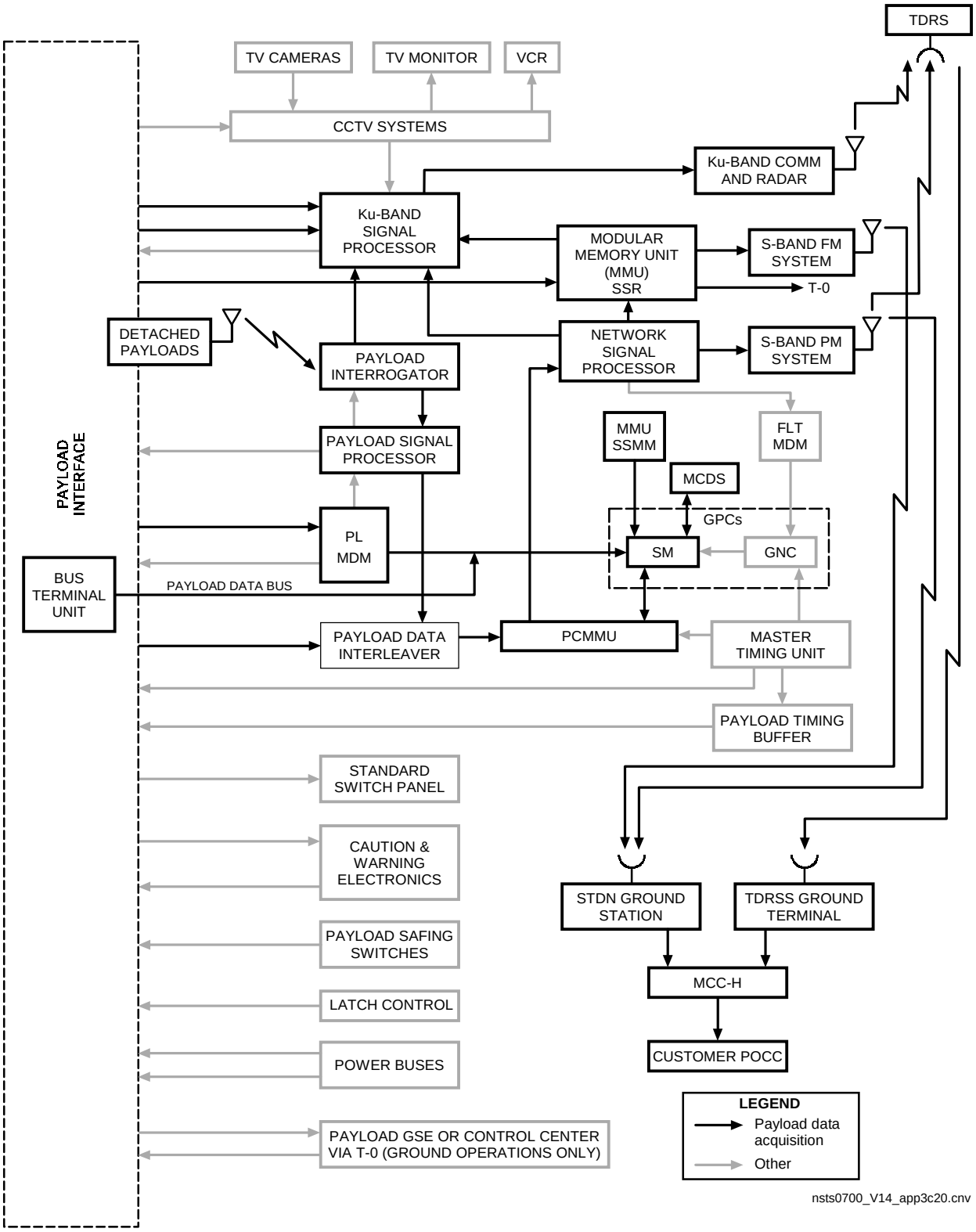

Figure 7-6.- On-orbit payload data acquisition data flow.

In downlist processing, the GPC buffers and transfers acquired data to the PCMMU and interleaves it into the PCM downlink data stream.

7.2.8 Payload Multiplexer/ Demultiplexer Data Processing

While the payload is in orbit and attached to the orbiter, payload data may be acquired by the SM GPC from the payload MDM (see Figure 7-6). Allowable data types are discretes, signed and unsigned eight-bit analogs, sign plus magnitude eight-bit analogs, and signed ten-bit analogs. Data received will be processed for display and/or FDA and downlisted by the GPC through the PCMMU to the ground.

7.2.9 Customer-provided Bus Terminal Unit Data Processing

While the payload is on orbit and attached to the orbiter, payload data may be acquired by the SM GPC from a customer-supplied bus terminal unit connected to the GPC data bus. The bus terminal unit must be compatible with the payload data bus characteristics and GPC software. The data bus code is biphase-L with a 1.0-Mbps burst rate on a half-duplex system. Bit rate tolerance is 0.1 percent. Allowable data types are signed or unsigned 8-bit analogs, sign plus magnitude 8-bit analogs, 10-bit signed analogs, and discretes.

7.2.10 Payload Data Interleaver Data Processing

While the payload is on orbit and attached to the orbiter, payload data may be acquired from the PDI. The SM GPC software can process 8-bit analog and discrete parameters from payload data. Allowable data types are unsigned 8-bit analogs, signed 8-bit analogs, and sign plus magnitude 8-bit analogs, and discretes.

7.2.11 Payload Interrogator/ Payload Signal Processor Detached Payload Data Processing

The PSP is software-configured to accept one of the allowable telemetry (format synchronization mode) codes and rates and convert it to NRZ-L (with clock) for routing to a dedicated port of the PDI. The PSP is configured by premission-defined PSP configuration messages sent by the GPC.

7.2.12 Ascent and Descent Data Processing

During ascent and descent, data is processed by the BFS GPC. Scaling of data to be displayed on the MCDS (MEDS) is limited to first order polynominal equations.

All BFS GPC parameters acquired from the PDI from the PCMMU are also automatically downlisted in the BFS GPC downlist. There is a maximum downlist (combined cargo element allocation) of 25 analog parameters, or 50 discrete parameters (or a combination of both) ranging from 49 discretes and 1 analog to 24 analogs and 16 discretes. (The 16 discretes are packed in one 16-bit word). This downlist constraint includes data acquired from the payload MDM and customer-supplied bus terminal unit. The downlist rate is 1.04 Hz. A limit of 50 parameters can be displayed by the BFS GPC.

7.2.13 Orbiter Display System

The orbiter display system consists of either the multifunction cathode ray tube display system (MCDS) or the multifunction electronic display subsystem (MEDS). The function of each is described in the following sections.

7.2.13.1 Multifunction Cathode Ray Tube Display System

The MCDS provides crew or system interaction from a keyboard and a CRT display. The various display formats (overlays) which can be selected by the operator are determined premission and stored in the modular memory.

The MCDS consists of a keyboard, for operator input; a 5-inch-by-7-inch display unit (DU), and a display electronic unit (DEU) which interfaces with the keyboard, DU, and SM computer. The SM computer determines character types, character positions, and symbols for display.

The keyboard unit has 32 keys and transmits information to the GPC through the DEU. The CRT operator can select a display format, and keystrokes appear at the bottom of the display for verification before they are sent to the GPC. The CRT screen is monochrome (green), and displays

alphanumeric characters and vector graphic symbols. Characters can be flashed and CRT brightness adjusted for individual characters. The DEU interprets keyboard and computer information to send proper deflection signals to the CRT.

7.2.13.2 Multifunction Electronic Display Subsystem

The MEDS provides crew or system interaction from a keyboard and an MDU display. The various display formats (overlays) which can be selected by the operator are determined premission and stored in the modular memory.

The MEDS consists of a keyboard, for operator input; a 6.7-inch-by-6.7-inch multifunctional display unit (MDU), and an integrated display processor (IDP) which interfaces with the keyboard, MDU, and SM computer. The SM computer determines character types, character positions, and symbols for display.

The keyboard unit has 32 keys and transmits information to the GPC through the IDP. The MDU operator can select a display format, and keystrokes appear at the bottom of the display for verification before they are sent to the PCG. The MDU screen is multicolor and displays alphanumeric characters and vector graphic symbols. Characters can be flashed and MDU brightness adjusted for individual characters. The IDP interprets keyboard and computer information to send proper deflection signals to the MDU.

7.2.14 Multiplexer/Demultiplexer

The orbiter payload MDM's act as data acquisition, distribution, and signal conditioning units (see Figures 7-7 and 7-8). MDM's accept serial digital information from the SM GPC through the GPC data bus system and convert or format this information into analog, discrete, or serial digital form for transfer to Space Shuttle subsystem and payload.

MDM's also receive payload data and convert and format it into serial digital words for transfer to the SM GPC.

MDM's contain input/output modules (IOM's) that interface with payloads. Individual IOM's do not incorporate redundant circuit design. IOM's are designed so that failure of an individual IOM will remain isolated to that IOM. If functional redundancy is required, it must be achieved by using another IOM. This normally requires the use of an additional MDM (PF02).

7.2.15 Multiplexer/Demultiplexer Input/Output Modes

There are six types of IOM's in payload MDM's; the characteristics of each are described in ICD 2-19001:

- Discrete output low (DOL) module - This module accepts serial digital data from the SM GPC and retransmits the information as discrete low level signals (0- or +5-Vdc levels) to the payloads.
- Discrete output high (DOH) module - This module accepts serial digital data from the SM GPC and retransmits the information as discrete high level signals (0- or +28-Vdc levels) to payloads.
- MDM serial - Four orbiter MDM serial I/O channels are available through customer-funded special PSDP and MSDP wiring. A serial I/O channel sends up to 32 sixteen-bit data words per transaction.
- Discrete input low (DIL) module - This module accepts discrete low-level signals (0- or +5 Vdc levels) from the payloads and formats the data for serial transmission to the SM GPC.
- Discrete input high (DIH) module - This module accepts discrete high-level signals (0- or +28-Vdc levels) from payloads and formats it for serial transmission to the SM GPC.
- Analog input differential (AID) module - This module accepts quasi-static analog signals in the range of +5.11 to -5.12 Vdc from payloads and converts them to digital signals for serial transmission to the SM GPC.

7.3 Orbiter Payload Data Bus

The orbiter provides the payload data bus to accommodate cargo servicing by orbiter data processing equipment. The data bus system provides compatible interfaces to allow the orbiter SM computer and payload bus terminal units to operate as a digital transmission system. All payload bus terminal units interface with the data

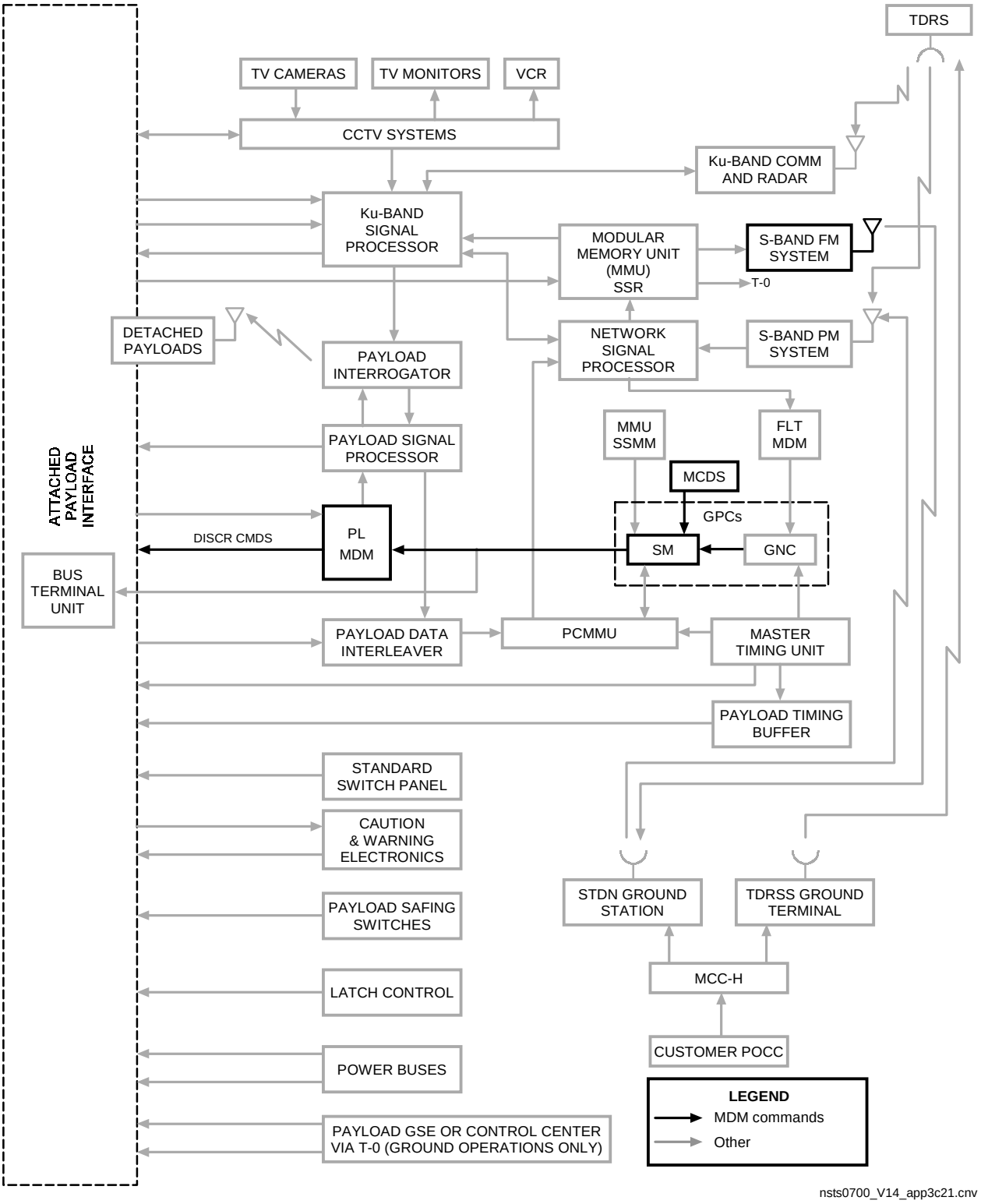

Figure 7-7.- On-orbit crew-initiated MDM discrete command.

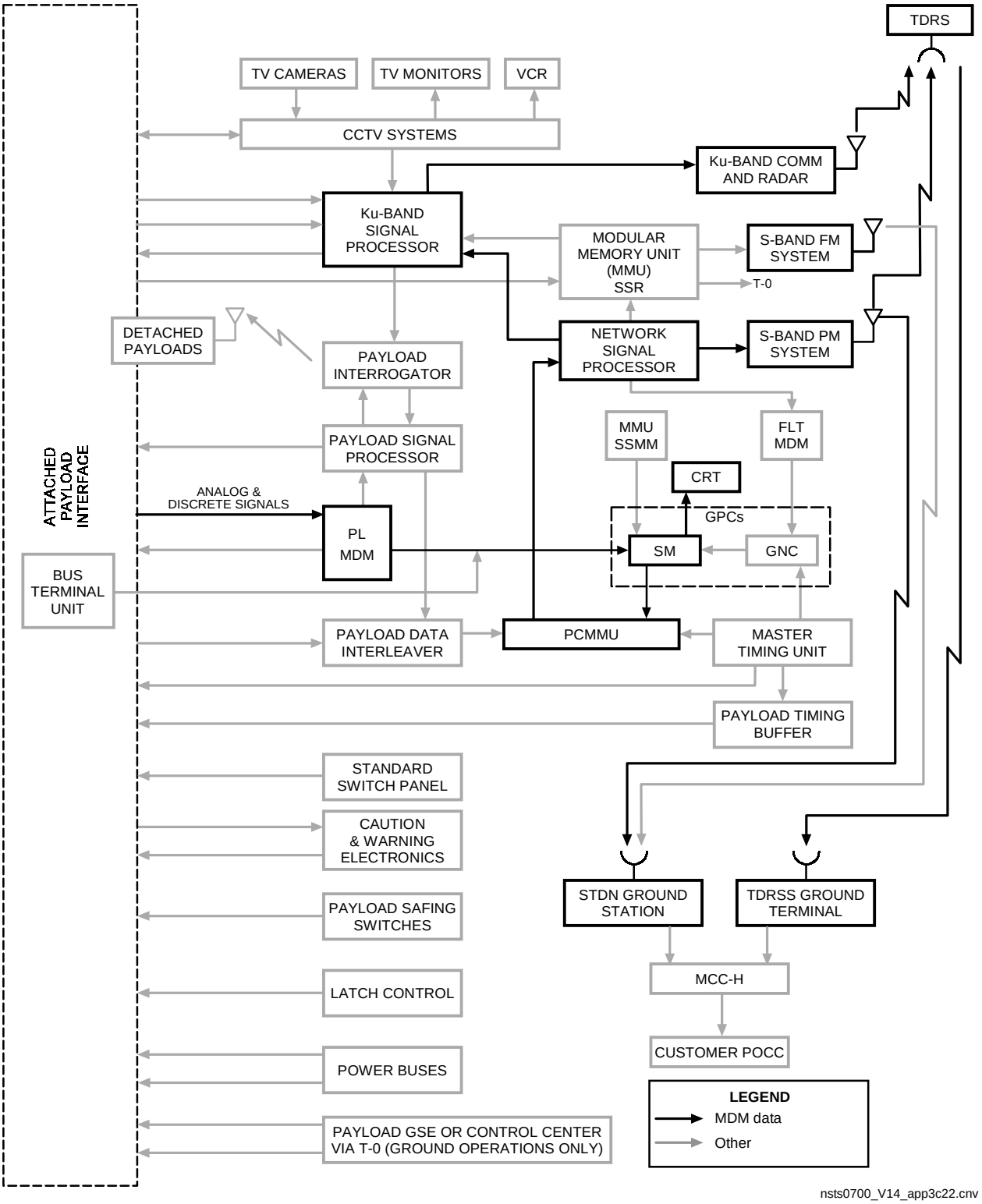

Figure 7-8.- On-orbit MDM data acquisition.

bus from a dedicated data bus coupler and cable stud (orbiter equipment). Data bus interface characteristics and requirements are defined in ICD 2-19001.

The customer-provided bus terminal unit must employ a data bus transceiver/decoder for a compatible interface with the data bus. This module is referred to as a multiplexer interface adapter (MIA) and is packaged within the payload bus terminal unit. MIA procurement is specified in ICD 2-19001.

7.4 Pulse Code Modulation Master Unit

The PCMMU performs the following functions:

- Interfaces with the PDI and orbiter subsystems
- Collects and stores data from PDI and orbiter subsystems interfaces in its memory
- Sends data to the orbiter DPS for onboard display
- Assembles and outputs prescribed telemetry data for transmission to the ground from the S-band PM link or Ku-band link.

Telemetry output data consists of synchronization, format identification, and PCMMU status and data words from the PCMMU memory. Each of the two PCMMU formatters (128 kbps and 64 kbps) independently extracts data from PCMMU memories, and outputs a serial PCM data stream to the NSP. The NSP normally selects the 128-kbps stream for transmission to the ground via the S-band PM link or Ku-band link. The lower data rate is used only if mission conditions require reduced power consumption, or if circuit margins are too low for the higher data rate.

7.5 Payload Interrogator

The PI is a fully redundant system, providing RF communications between the orbiter and detached payloads. The PI receives telemetry from detached payloads for processing and retransmission to the ground, and transmits ground-or orbiter-originated commands to detached payloads.

The PI unit consists of a multichannel receiver, a multichannel transmitter, channel selector and control modules, RF devices and coupling networks, and interface circuitry and instrumentation. The PI can support payloads with the PSP (as a standard service), and by direct transmission to the ground through the Ku-band system (as a nonstandard service).

The PI can simultaneously transmit commands to and receive telemetry from a Deep Space Network (DSN)- and STDN-compatible transponder-equipped payload. The PI can operate on any single set of frequencies (one transmit, one receive) selected from the 831 NASA payload transmit/receive frequency sets (808 STDN sets plus 23 DSN sets). The transmit-to-receive frequency ratio is 221/240. The PI also provides four receive-only and six transmit-only channels. The STDN and the DSN transmit/receive frequency channel allocations are listed in ICD 2-19001.

The PI has a common RF input/output port for full duplex operation in STDN and DSN modes.

The receiver can automatically acquire, lock on to, and phase track modulated and unmodulated RF signals in the 2200 to 2300.875-Mhz frequency band. The receiver is equipped with a demodulator for detection of phase-modulated RF signals to provide subcarriers or baseband data to the PSP, payload station, or KUSP (in bent-pipe mode).

For signal acquisition, the receiver is swept linearly, ±112 kHz minimum and ±132 kHz maximum, from the selected receive frequency. The receiver will automatically acquire phase-modulated RF signals at any assigned frequencies listed in ICD 2-19001 plus or minus (±80 kHz). The sweep generator of the phase lock loop is automatically inhibited when a valid carrier lock is achieved. The specific frequency used by the payload is defined in Payload Data Package Annex, PIP Annex 1.

The PI can detect a 1.024-Mhz subcarrier (PSK modulated) from the phase modulated carrier. The detected signal is fed through two buffer amplifiers, interfacing with the KUSP and PSP. Amplifier outputs are isolated from each other by a minimum of 40 decibels (dB). The PI/PSP may forward a maximum of 16 kbps of telemetry data to

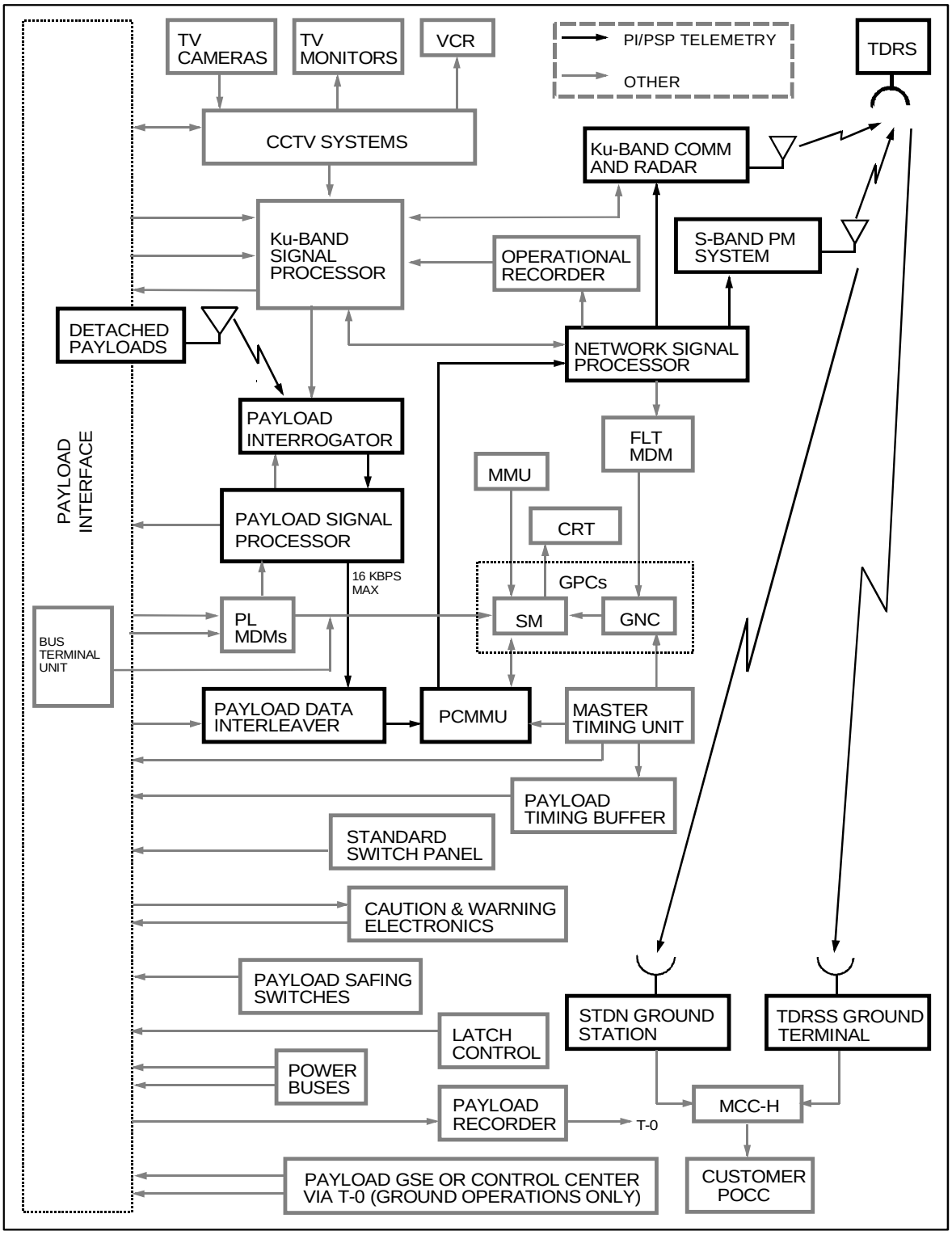

Figure 7-9.- On-orbit PI/PSP telemetry data flow.

the PDI, subject to the PDI data throughput limitations as discussed in paragraph 7.6 (see Figure 7-9).

Use of the PI must be time shared on orbit. Priority use of the PI will be given to the payload undergoing deployment. Payload selection is accomplished by switching frequencies.

7.6 Payload Signal Processor Commands

The PSP, a fully redundant system, receives command data from the GPC by the payload MDM. The PSP rate-buffers the data and sends it to the PI for RF transmission to a detached payload or payload umbilical for routing to an attached payload. The PSP is configured according to a configuration message from the GPC; modulates a 16-kHz subcarrier with payload commands in NRZ-L, -M, or -S format; and transmits the modulated subcarrier to the PI or to one of five attached payloads. Allowable data rates are 2000, 1000, 500, 250, 125, 125/2, 125/4, 125/8, or 125/16 bps.

The PSP can modulate the 16-kHz subcarrier with an idle pattern when no payload commands are being transmitted. The 16-kHz sinusoidal subcarrier is PSK modulated by the data or idle pattern, in either NRZ-L, -M, or -S data formats. The 16-kHz subcarrier is on continuously once the PSP is powered. The configuration message controls modulation of the subcarrier as follows: subcarrier only (no modulation), idle pattern, data rates, NRZ-L, -M, or -S formats.

Command flow for PSP commands is shown in Figure 7-10. PSP commands are defined premission and stored in the GPC as a standard service, or at the MCC-H as an optional service. See paragraph 7.2.1. Commands stored in the GPC may be initiated on board, or at a POCC and transmitted through the MCC-H. Optional MCC-H stored commands are initiated at the MCC-H. The path for crew-initiated commands is from the MCDS (MEDS)/SM GPC through a dedicated SIO channel of a payload MDM, through the PSP, and then to an attached payload connected to a PSP output umbilical. A variation of this path is from the PSP, through the PI, then to a detached payload from an RF link. Only one payload at a time may use this path or variation.

7.7 Payload Signal Processor Telemetry

The PSP supports detached payload telemetry by accepting the demodulated PSK subcarrier containing detached payload telemetry. The PSP processes this signal and outputs the PCM data stream to the PDI for further processing and subsequent insertion into the operational telemetry downlink and/or into the PCM data RAM for onboard display.

The PSP receives a configuration message from the SM computer through the payload MDM. The configuration message configures the PSP for the telemetry bit rate, waveform type (NRZ or biphase), number of 8-bit telemetry words per frame, number of bits in the sync word, and sync word pattern as defined in the payload-unique ICD.

The PSP receives a 1.024-Mhz subcarrier, PSK modulated with biphase-L, -M, or -S, or NRZ-L, -M, or -S payload PCM data, from the PI. This signal is demodulated to recover payload telemetry data.

The PSP sends telemetry data to the PDI at the rate received from the PI (1, 2, 4, 8, or 16 kbps). Payload data rate accuracy and stability must be within the tolerance specified in ICD 2-19001, for the PSP to achieve bit and frame sync lock. The PSP transmits NRZ-L data plus clock to the PDI when frame sync lock is achieved. Limited frame sync errors received from the PI are corrected by the PSP, and error-free frame sync words are sent to the PDI. Block mode telemetry is not allowed through the PSP.

7.8 Payload Data Interleaver

The PDI can receive up to seven asynchronous payload PCM streams: five from attached payloads and one from each PSP. Inputs from the two PSP's are ORed and fed to a switch matrix with the other five streams. Four of the six switch matrix input streams are selected, bit synchronized, and decommutated. Words from each decommutated PCM stream are buffered, accessed by the PCMMU, and inserted into the operational PCM downlink; or selected words may be made available for access by the SM computer for onboard CRT display.

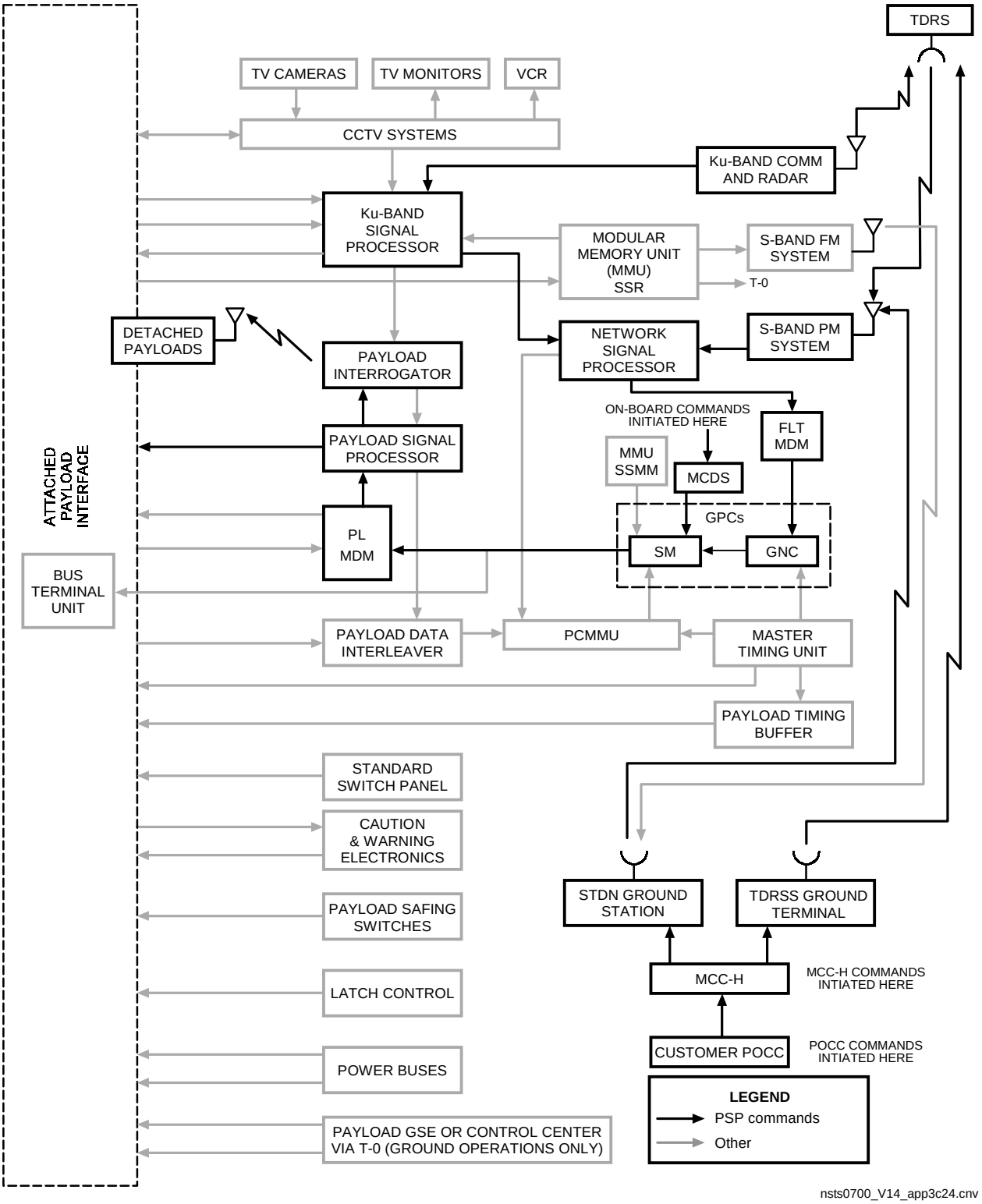

Figure 7-10.- On-orbit PSP command data flow.

The PDI decommutates up to four telemetry input streams simultaneously and interleaves them into a single data stream for downlinking to the ground. PDI decommutation formats are defined premission and loaded into the PDI under GPC control. These formats are referred to as DFL's.

During ascent, payload downlink telemetry will be limited to 1.6 kbps per section (including orbiter time tag and status), which corresponds to a payload data rate of approximately 1.2 kbps.

On orbit, payload downlink is nominally limited to 17.6 kpbs/section (including orbiter time tag and status) during payload checkout and deployment. Payload data rate is approximately 16 kbps.

During orbital operations, a payload may downlink data at a maximum rate of 68.8 kbps (including orbiter time tag), on a time-shared basis for predeployment and postretrieval checks. Payload data rate is approximately 64 kpbs. During predeployment and postretrieval, other sections will be allowed to downlink a maximum of 1.6 kbps each (including orbiter time tag and status).

The orbiter PDI operates in two decommutation modes, block mode and format synchronization mode. Allowable telemetry codes are NRZ-L, -S, or -M, and biphase-L, -S, or -M.

Block mode allows the PDI to throughput payload nonstandard telemetry formats into the orbiter operational downlink. Since the PDI cannot decommutate this nonstandard telemetry stream, data cannot be acquired or processed by the orbiter GPC. The PDI will lock onto the first available bit and restructure all subsequent bits into data blocks appropriate for inclusion in the orbiter downlink to the ground.

In format synchronization mode, the PDI decommutates payload telemetry data into two different groups for transfer to the PCMMU. The first group includes payload data selected on a telemetry frame basis and transferred from the PDI to the PCMMU solely for interleaving (by the PCMMU) into the orbiter operational downlink. The second group is selected on a parameter basis and transferred to the PCMMU for acquisition by the orbiter GPC. The parameter, its word location within a minor frame (or master frame), the first minor frame in which it appears, and its sample rate are part of the PDI decommutation process. Both groups may be processed simultaneously for a single telemetry stream. See ICD 2-19001 for more details.

The following format types are used in the format synchronization mode and can be processed by the GPC.

- Synchronization mode, format type 1 - A payload telemetry stream consisting of master frames only. (A master frame is a major frame in other documents.) A master frame sync pattern occurs once every master frame.

- Synchronization mode, format type 2 - A payload telemetry stream consisting of two or more minor frames in a master frame. The start of a master frame includes a master frame sync pattern which occurs once every master frame. Every minor frame is identified by a minor frame sync pattern.

- Synchronization mode, format type 3 - A payload telemetry stream, identical to format type 2, but containing a minor frame counter. Every minor frame contains an eight-bit minor frame counter. The counter may count up or down form the initial value but must not have negative values.

On orbit with the payload attached to the orbiter, the telemetry stream is routed from the payload to the PDI, then through the PCMMU. The telemetry stream is then routed through the NSP and either S-band PM equipment or Ku-band equipment for transmittal to a POCC through the MCC-H. See Figure 5-1. The PCMMU assembles data from various sources into a specific format for downlinking to the ground. These formats are called TFL's, and are defined premission and loaded into the PCM under GPC control.

7.9 Ku-band Signal Processor

The Ku-band communication system is a combined system with the rendezvous radar. The system cannot be used in both the radar and communication modes at the same time. Ku-band service is not available when the payload bay doors are closed.

Use of the KUSP is an optional service. The KUSP provides a 128-kbps forward link channel for payload commands, and return link channels for transmitting payload wideband analog and

digital data to the ground. The KUSP also provides bent-pipe capability for relaying detached payload telemetry to the ground. KUSP data flow is shown in Figure 7-11.

The 128-kbps forward channel must be time shared with the orbiter text and graphics channel. The forward data link is in NRZ-L format accompanied by a clock. Characteristics of the data and clock signals are defined in ICD 2-19001.

For downlink, the Ku-band system operates in two modes, quadrature phase shift key (QPSK) PM (Mode 1) and Frequency Modulation (FM) (Mode 2), with three channels of input data in each mode. In both modes of operation, channel 1 contains the operational downlink telemetry and voice. For channels 2 and 3, which are available as an optional service, available input functions are shown in Table 7-I.

Only a single input to channels 2 and 3 of the Ku-band is available to all payloads. For mixed user flights, where some payloads are susceptible to Ku-band electromagnetic interference, deployment operations will be coordinated to preclude incompatible operations.

The PGSC can interface with the KU-band Signal Processor to allow two-way transfer of computer files with a ground-based computer.

7.10 Timing

Timing signals are provided by the orbiter MTU for payload use. The MTU can send frequency and time code outputs through redundant crystal oscillators, frequency divider circuits, and GMT/MET accumulators. The MTU is updated from the ground as necessary to maintain an accuracy of 10 milliseconds with universal time, coordinated (UTC). A payload timing buffer sends both MET and GMT outputs (eight GMT outputs and four MET outputs) to payloads.

Each payload will be provided, as a standard service, two GMT and one MET time code outputs in IRIG-B modified code formats.

The orbiter MTU provides several optional timing outputs. These timing signals may be used by the payload to synthesize other timing frequencies. The MTU has the following optional payload dedicated output frequencies:

- 4.608-MHz reference square-wave frequency
- 1.024 -MHz reference square-wave frequency
- 1.0 -kHz reference square-wave frequency
- 100 -Hz reference square-wave frequency
- 10-Hz reference square-wave frequency

Characteristics of these timing signals are defined in ICD 2-19001.

TABLE 7-I.- KUSP DOWNLINK MODES

Mode 1 QPSK PM	Channel 2 (Select one)	• PI (narrowband bent pipe from detached payload) • Payload digital output, 16 kbps to 2 Mbps, NRZ-L, -M, or -S, or 16 kbps to 1.024 Mbps, biphase-L, -M, or -S • Operational data (MMU dump) • Payload data MMU dump
	Channel 3	• Payload digital output, 2 to 50 Mbps with clock, NRZ-L, -M, or -S
Mode 2 FM	Channel 2	• Same as mode 1
	Channel 3 (Select one)	• Television • Payload digital output, 16 kbps to 4 Mbps, NRZ-L, -M, or -S • Payload analog output, dc to 4.5 Mhz • PI (wideband bent pipe from detached payload)

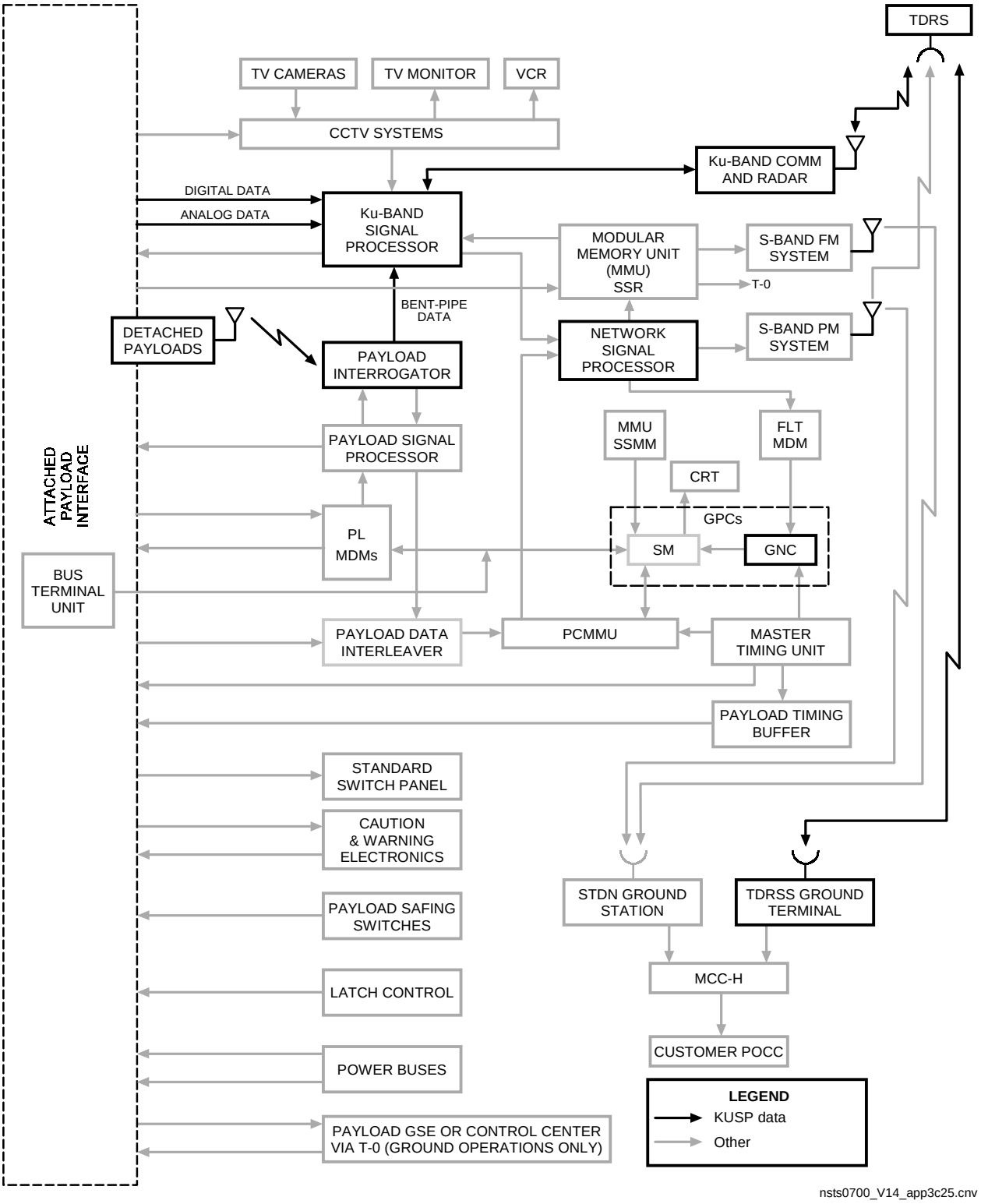

Figure 7-11.- Ku-band signal processor.

7.11 Payload Recorder

The orbiter MMU provides digital recording services to customers. There are four serial digital inputs available for payloads. Each customer is allowed to specify 10 minutes of recording on-orbit for deployment operations. Data may be recorded for any payload when the recorder is operating. Recordings are played back postlanding, and are available from John F. Kennedy Space Center (KSC).

The MMU does not provide a time base. Any customer requirements for time correlation must be included in the user data stream.

As a nonstandard service, the MMU will accept digital inputs of 32 kbps, 64 kbps, and 1000 kbps, either serial or parallel, up to 4 tracks. The serial/parallel track programming is determined by preflight payload distribution panel wiring. The playback rate is 1024 kbps.

7.12 Payload Retention Panel

Operation of orbiter-deployable retention fittings or customer-supplied devices through the orbiter retention system electrical subsystem requires a patch harness in the orbiter. The harness will connect up to five selected sets of two electrical receptacles at payload bay longeron or keel fitting locations, to selector switch positions on the payload retention panel (A6A1 - on-orbit station). See Figure 7-12. The switches on this panel are as follows:

- Payload select switch - a five-position rotary switch governing which set of latches or payloads are operated and allows the operator to monitor latch status. The switch has three payload select positions and two monitor positions. When a payload select position is chosen, the operator can control up to five latches and monitor all the talkbacks associated with that position. The monitor position allows the operator to monitor every latch during any mission phase, and functions as an inhibit to prevent latch operation or inadvertent payload deployment. To obtain total payload status, the operator must call up the payload retention CRT display with the payload select switch in the monitor position.

- Retention latch select switch - five latch switches, each of which is a three-position switch (release, off, and latch), commanding two motors to open or close the motors' particular latch. The same five switches can operate as many as 15 latches. Five latches can be operated per payload select switch position, although the number of latches is determined by the size of the payload. Latch switch assignments are flight dependent.

- Payload retention latch talkbacks - each retention latch is associated with two talkbacks, a release/latch indication, and a payload ready-for-latch (trunnion-in-place) indication, for a total of ten talkbacks. The talkbacks also work with the payload select switch. When a payload is selected, the talkback indications correspond only to the selected payload. The release/latch talkback has three indications: release (latch open), barberpole (latch transit), and latch (latch closed). The ready-for-latch talkback has two indications: gray when a payload is present and/or latched, and barberpole when payload is deployed. If power is not on, both system talkbacks will show barberpole.

- Payload retention logic power - two retention system switches which power the midmotor control assembly logic. Both logic power switches must be on to drive both motors on each latch simultaneously. Only system 1 drives both talkbacks.

7.13 Aft Flight Deck Payload Unique Panel

Additional panel and mounting space is available at A6, A7, and R11 locations in the AFD (Figure 7-13). Cable and cooling accommodations are not available at these locations except as an optional service.

7.14 Standard Switch Panel

The standard switch panel (see Figure 4-2) primary location will be in the AFD payload station, dedicated console location L12, with optional locations in L10 or L11 when defined in the payload-unique ICD's.

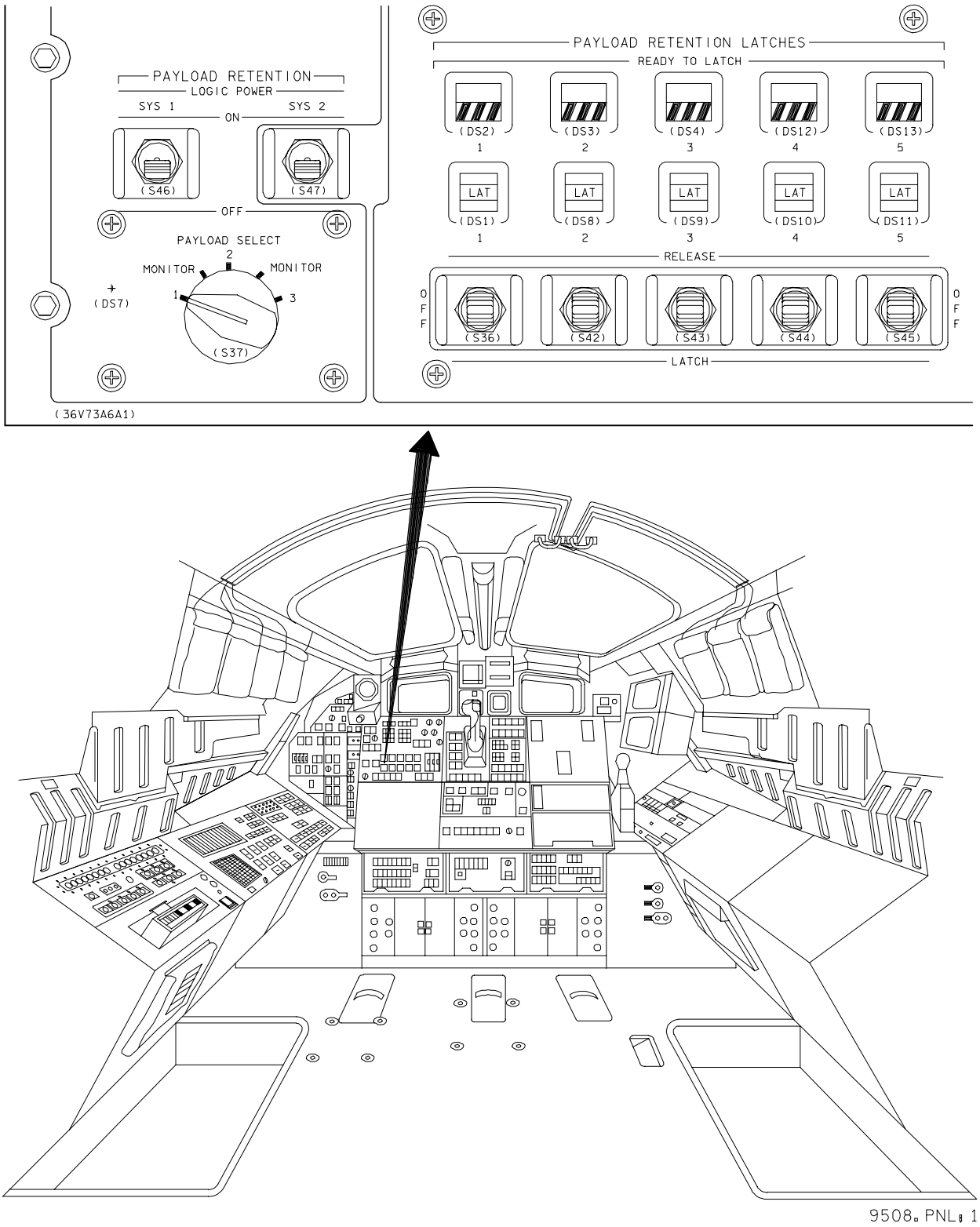

Figure 7-12.- Payload retention panel.

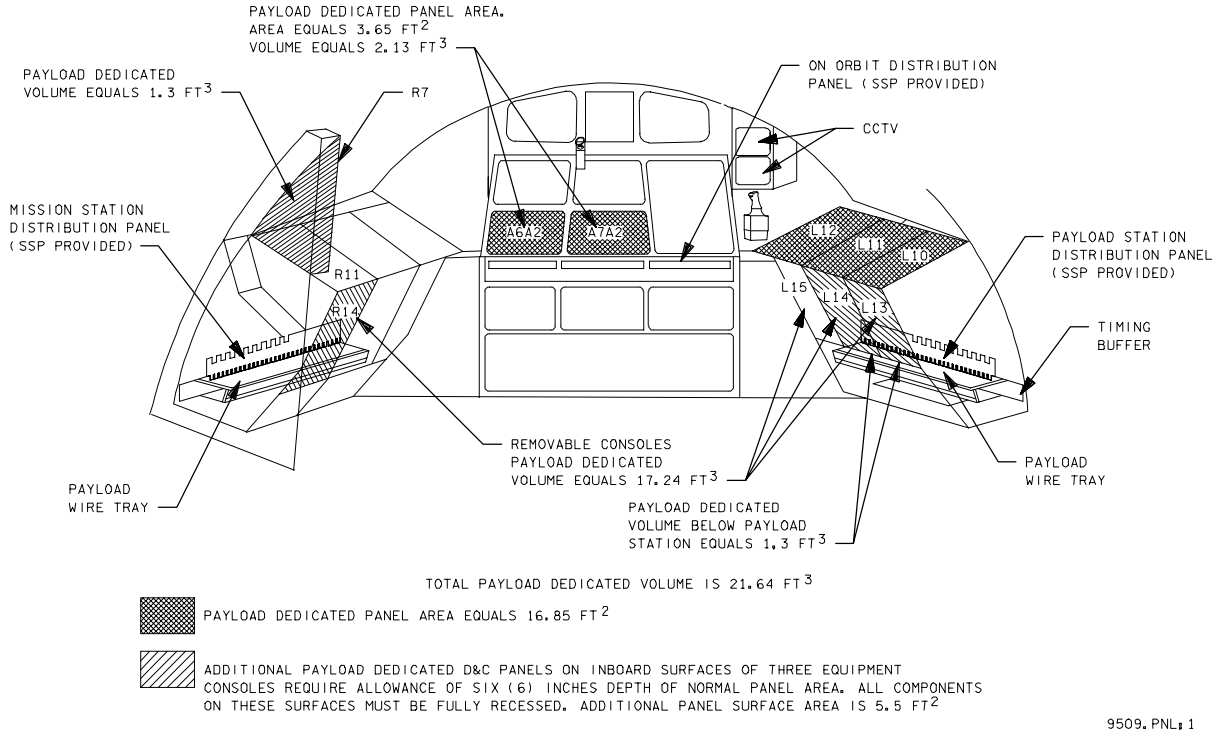

Figure 7-13.- Orbiter payload physical interface locations - aft flight deck.

There are two standard switch panels for payload use. Each has two identical half sections. One half section is available as a standard service to each payload in the payload bay. Each standard switch panel half section provides 12 switches and 12 status indicators for payload use, limited experiment control capability, and pallet power control. Switch characteristics and voltage levels are defined in ICD 2-19001. Interface provisions for the standard switch panel are located at the port standard interface panel.

If a customer elects to provide the excitation voltage to switches on the standard switch panel, each circuit shall be current-limited on the payload side to the equivalent of a 5-amp fuse or less.

The standard switch panel provides ten 28 Vdc discrete, two-position status indicators and two 3-position status indicators for each of four sections in the payload bay. Characteristics of and access to these indicators are given in ICD 2-19001.

7.15 Deployment Pointing Panel

The DPP has two toggle switches and a rotary switch which can arm and fire any one of nine separate pyrotechnic devices, see Figure 7-15. It also provides the signal conditioning and output selection for payload pointing signals originated in the manual pointing controller (MPC) which connects to the DPP.

The pyrotechnic initiation functions of the DPP are typically used for payload deployment when the payload has a cradle that remains in the payload bay. The panel provides separately switchable 28-Vdc “Arm” and “Fire” discretes to the payload.

The MPC is a portable, hand-held unit available at several locations in the AFD to supply pointing commands to a payload in the payload bay. It provides discrete outputs (0 or 5 Vdc) to control mode, gain, and roll as well as a discrete output notifying the payload that power has been applied to the MPC. A two-axis, force-operated joystick produces continuously variable outputs (+5 to -5 Vdc) for pitch and yaw control.

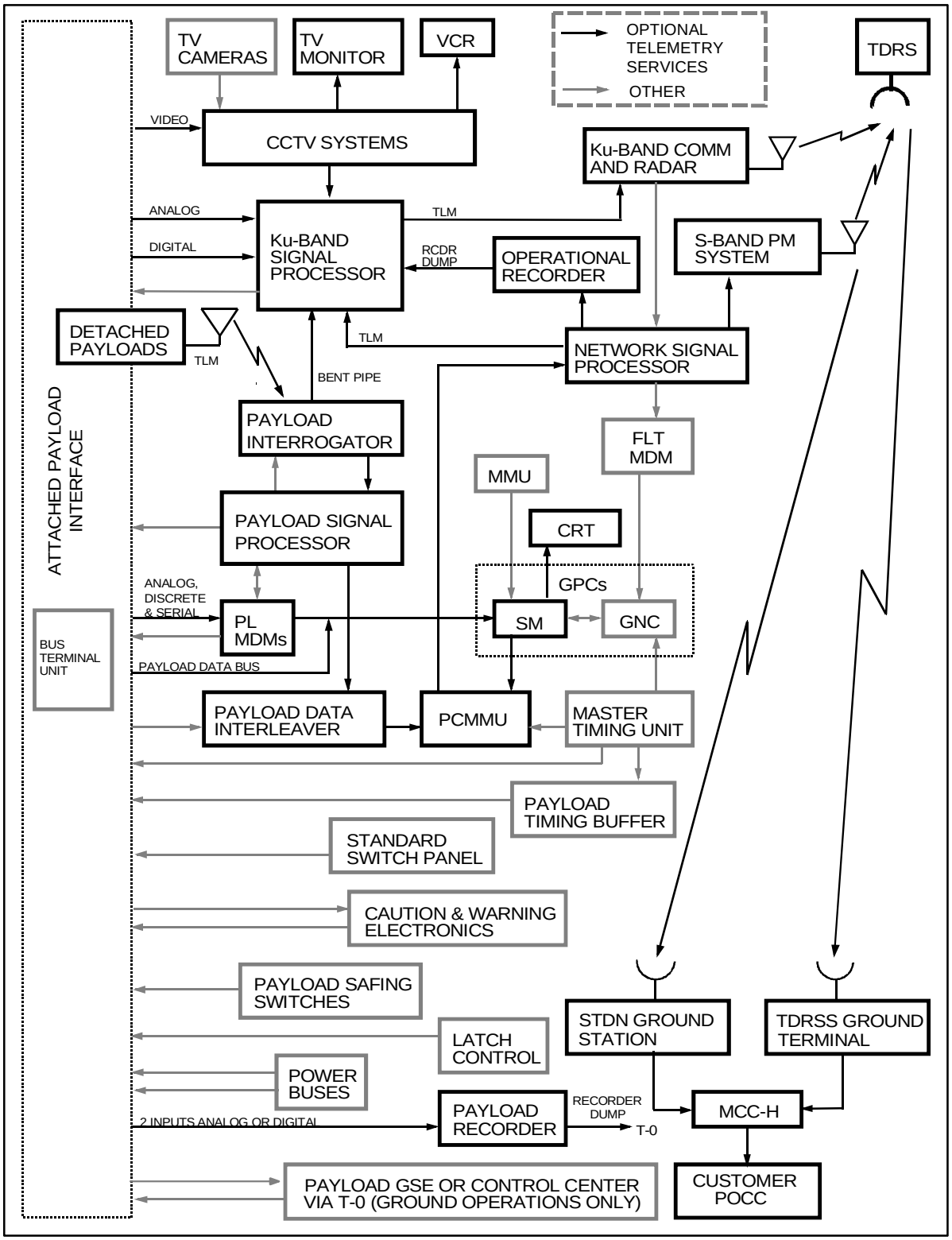

Figure 7-14.- Optional telemetry services data flow.

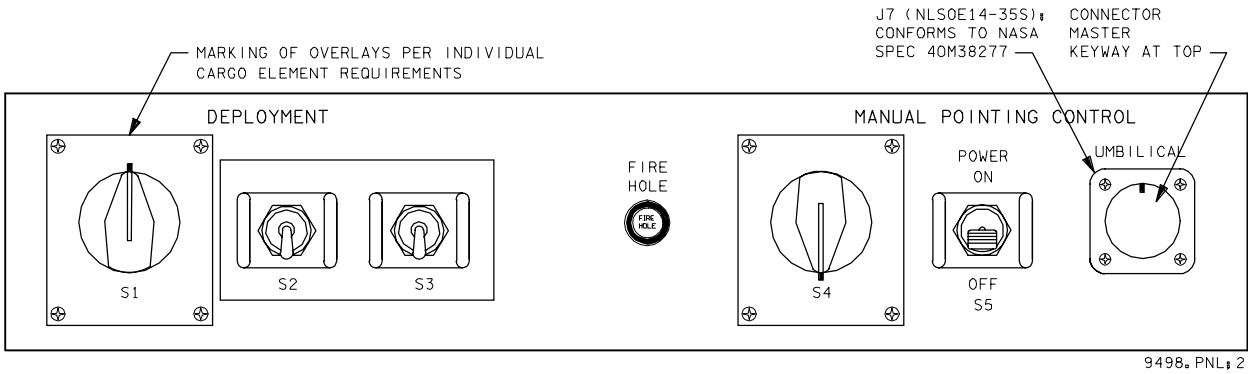

Figure 7-15.- Deployment pointing panel front panel layout.

7.16 Payload Safing Switches

Five switches are allocated for payloads that require active safing control during prelaunch, ascent, or descent.

These payload safing switches are located on the center console between the Space Shuttle commander and pilot. See Figure 7-16. Each switch can send a payload-provided signal back to the payload. The customer must provide excitation voltage current limiting to the equivalent of a 5-A fuse or less. This function can be used with the caution and warning alerts discussed in paragraph 7.17.

7.17 Caution and Warning

There are various ways for the crew to identify malfunctions, from simple parameter monitoring to audiovisual alerts. Audio and visual alerts should only be used when crew intervention is required. The two classes of crew alert available to payload are class 2 and class 3. Payload use of class 2 alerts is an optional service; use of class 3 alerts is a standard service. FDA data processing is discussed in paragraph 7.2.7. A functional diagram of the caution and warning system is shown in Figure 7-17.

7.17.1 Class 2 Alerts

The class 2 alert, or caution and warning (C&W) alarm, is used when immediate crew action is required. Because of class 2 alarm criticality, implementation is performed in two ways for redundancy. One redundant method of implementation employs the orbiter C&W electronics assembly (CWEA) and is independent of orbiter software. The other method uses payload data acquired by the BFS (SM) GPC.

The CWEA direct input can be a low-level (0 to 5 Vdc) analog or discrete, or a high-level (0 or 28 Vdc) discrete. The CWEA performs limit sensing of this parameter and when preset limits are exceeded, four master alarm lights are illuminated in the crew compartment, a distinctive audio tone (C&W tone) is produced through the crew intercom system, and the red payload warning status light (Figure 7-18) is illuminated on the 8 x 5 C&W light matrix. Detailed interface requirements for the CWEA can be provided upon request.

The GPC-acquired data is also limit sensed. When limits are exceeded, the CRT displays an up (high limits exceeded) or down (low limits exceeded) arrow next to the parameter value (or state) on the CRT parametric display page. The GPC generates a fault message on the CRT and sends a signal to the CWEA. The CWEA then illuminates the master alarm lights, illuminates a yellow payload caution status light on the C&W light matrix, and generates the C&W tone.

7.17.2 Class 3 Alerts

The class 3 alert, known as a payload or SM alert, is less urgent than the class 2. Crew action or intervention are not immediately required. This alert is implemented by payload data acquired by the BFS (SM) GPC. When preset limits are exceeded, an up or down arrow is displayed adjacent to the parameter value on the CRT, a fault message is generated, a distinctive tone

different from the C&W tone is generated, and blue SM alert light on the forward flight deck is illuminated.

Payload designers should eliminate failure modes requiring use of these alerts, especially during ascent and descent. Other crew interfaces are recommended for status advisories which may have safety implications but do not require urgent crew action.

7.18 Audio Central Control Network

The Audio Central Control Network (ACCN) provides duplex voice communication, paging and warning to attached manned payloads. The ACCN provides the following analog channels:

- Air to Ground 1
- Air to Ground 2
- Intercom A
- Intercom B
- Air to Air
- Page

For more information, see ICD 2-19001.

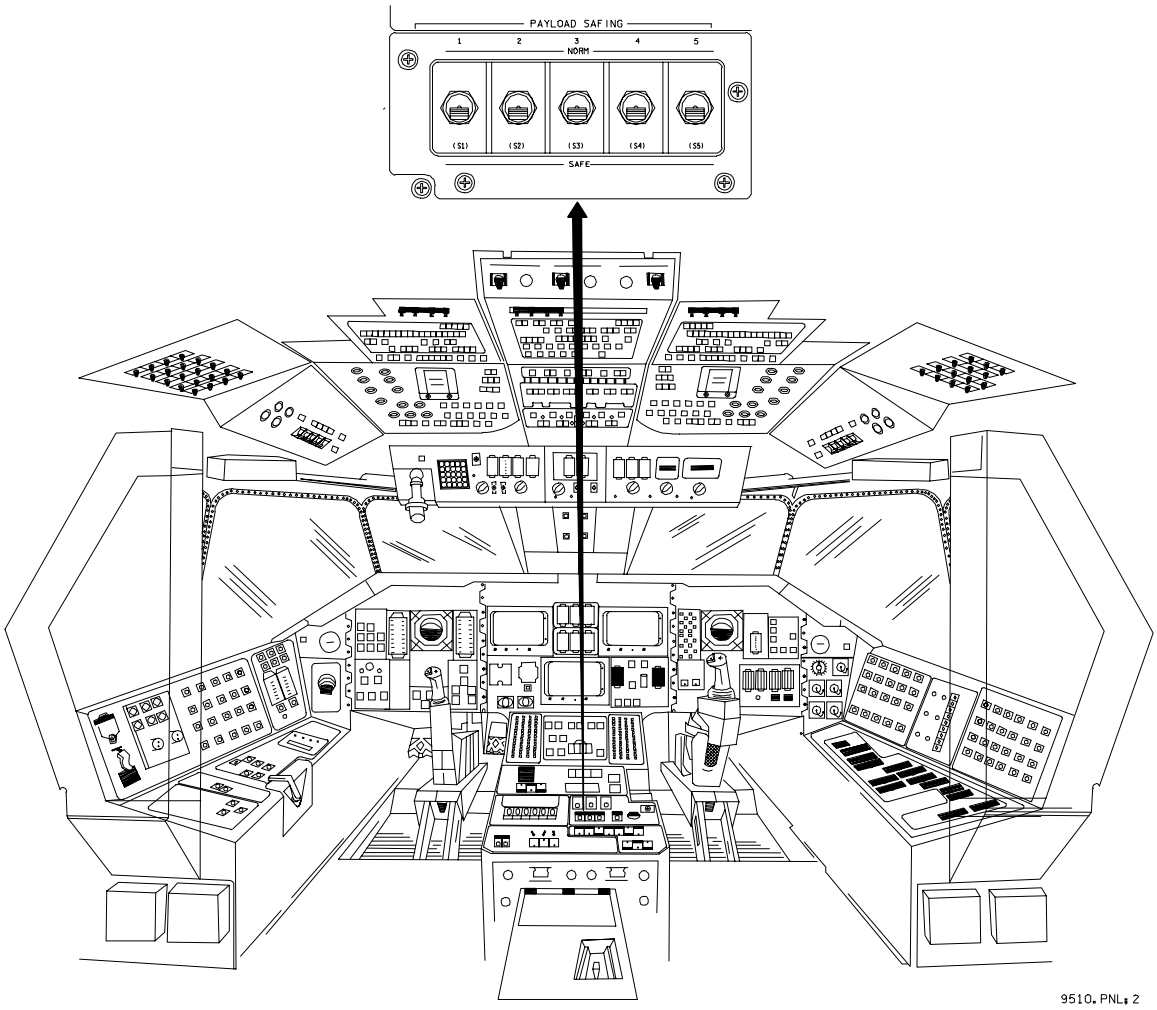

Figure 7-16.- Payload safing switches.

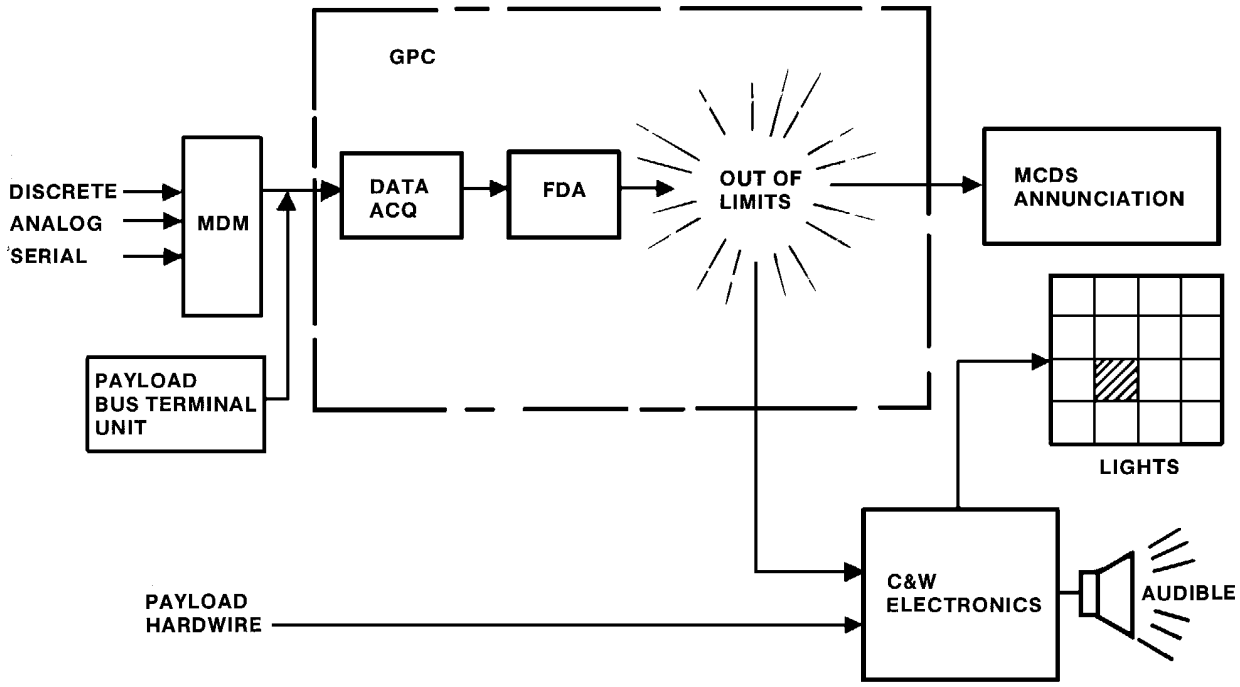

Figure 7-17.- Functional diagram, caution and warning system.

O_2 PRESS	H_2 PRESS	FUEL CELL REAC	FUEL CELL STACK TEMP	FUEL CELL PUMP
CABIN ATM	O_2 HEATER TEMP	MAIN BUS UNDERVOLT	AC VOLTAGE	AC OVERLOAD
FREON LOOP	AV BAY/ CABIN AIR	IMU	FWD RCS	RCS JET
H_2O LOOP	RGA/ACCEL	AIR DATA	LEFT RCS	RIGHT RCS
———	LEFT RHC	RIGHT/AFT RHC	LEFT OMS	RIGHT OMS
PAYLOAD WARNING	GPC	FCS SATURATION	OMS KIT	OMS TVC
PAYLOAD CAUTION	PRIMARY C/W	FCS CHANNEL	MPS	———
BACKUP C/W ALARM	APU TEMP	APU OVERSPEED	APU UNDERSPEED	HYD PRESS

(34V73A7A2)

Figure 7-18.- Caution and Warning Panel F7 annunciator matrix.

Single Section Payload Wiring and Harnesses

8

8.1 Standard Accommodations

The standard mixed cargo harnesses SMCH's interconnect the payload with the standard orbiter avionics. Services for a single section consist of four cables terminated at two standard interface panels, one on the starboard side of the payload bay (Figure 8-1) and the other on the port side. Three additional SMCH cables are available to each single section payload to interface the port standard interface panel to GSE through the orbiter T-0 umbilical. The T-0 umbilical, connecting the orbiter to the ground facility, is disconnected at Shuttle liftoff.

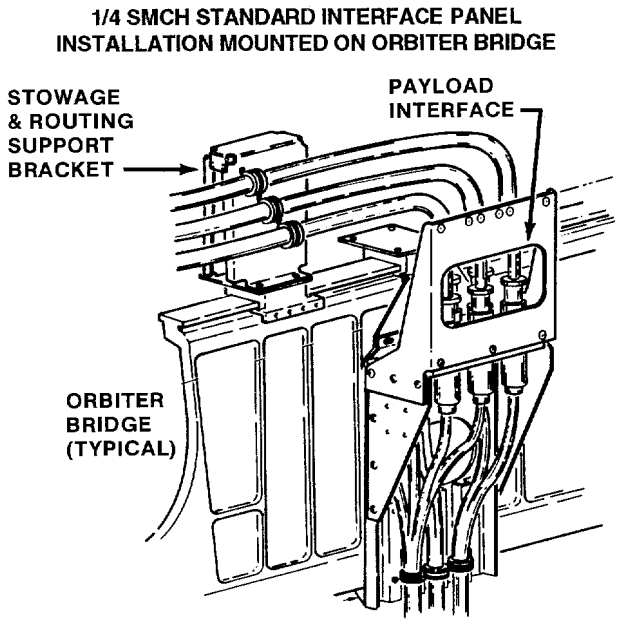

Figure 8-1.- Standard interface panel.

As shown in Figure 8-2, one cable interfaces at the starboard standard interface panel to provide payload primary dc power.

a. J206--payload primary dc power

The J206 cable consists of three 0-AWG wires: power, return, and structure ground. Connecting the structure ground wire from the orbiter structure to a payload structure will satisfy the fault bond, static bond, and lightning protection requirements of ICD 2-19001.

The port standard interface panel consists of three connectors required for orbiter services and three connectors providing payload access to payload-provided GSE.

a. J103--standard switch panel switches and MDM DOH commands to the payload

b. J107--PDI (data and clock), PSP, GMT(2), MET

c. J108--standard switch panel indicators and MDM low-level commands and measurements (DOL, DIL, and AID)

d. J102--T-0 access for EMC HO class circuits (12)

e. J104--T-0 access for EMC ML class circuits (7)

f. J106--T-0 access for EMC RF class circuits (6)

T-0 access cables were designed and installed to meet specific orbiter EMC criteria (HO, ML, and RF) as defined in ICD 2-19001. The customer must comply with these criteria when using these circuits to avoid interference with orbiter functions routed in adjacent cables. RF-classified circuits are typically used for functions such as payload/GSE, uplink, and downlink communication independent of orbiter processing. ML-classified circuits provide an interface for low-level (5-Vdc) payload/GSE discrete and analog signals, and circuits generally provide limited dc ground power

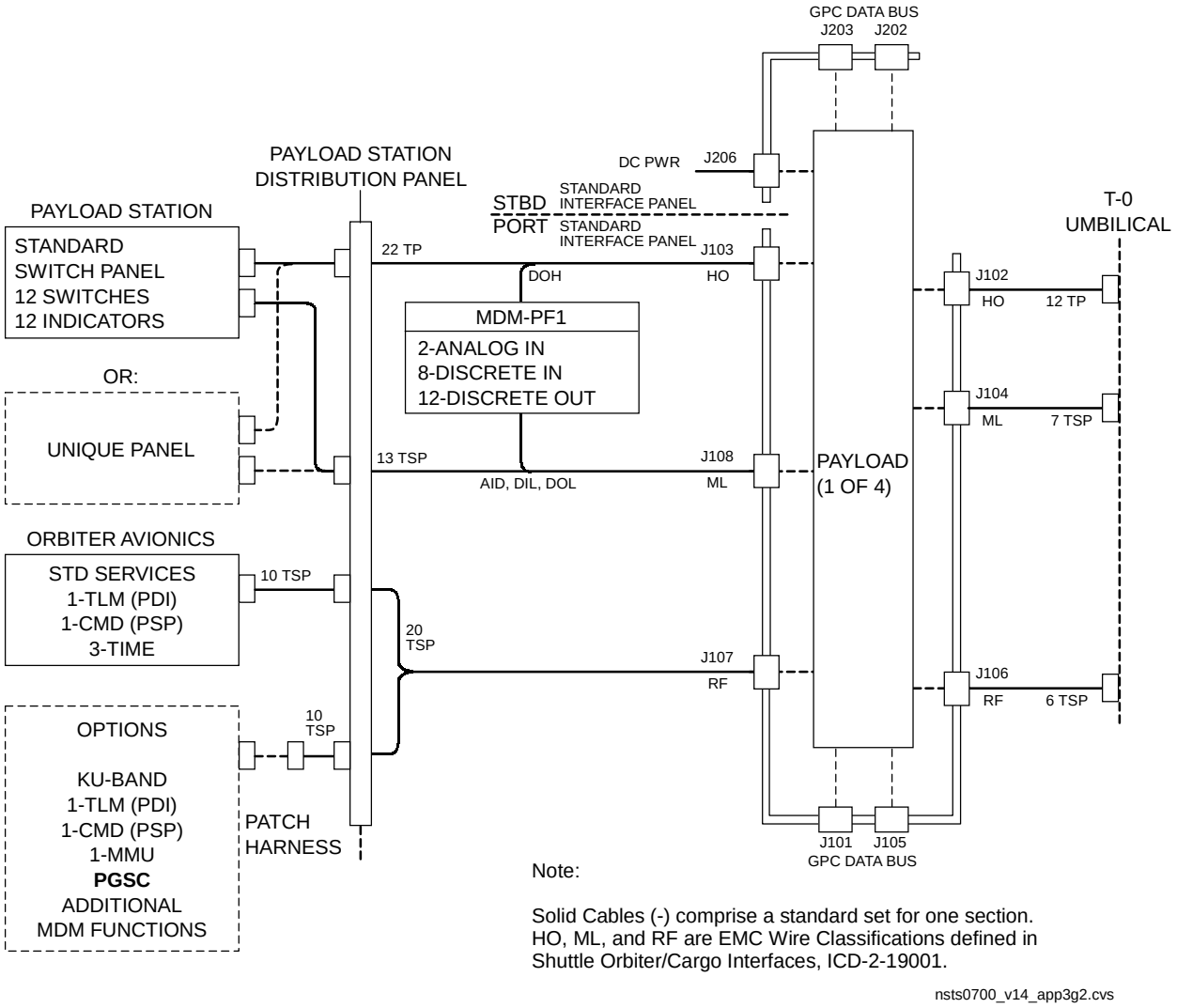

Figure 8-2.- Standard mixed cargo harness (SMCH) for a single section.

for payload heaters, battery charging, etc., and for high-level (28-Vdc) command and response signals.

Electrical interface implementation requirements are specified in ICD 2-19001. The standard interface panels are installed just forward of the payload structure. The SMCH harness is then routed up the sidewall and connected to the bottom side of the feedthrough connectors mounted in the standard interface panel. Customer-provided extender cables (which are tied out of the way during payload installation into the orbiter) are routed to the sill longeron and down to the standard interface panel and mated with the top side of the feedthrough connectors mounted in the standard interface panel. The payload extender cables should be clamped down as near as possible to the forward part of the payload structure, and should exit from the structure in the $-X_0$ or forward direction. The extender cables, will be clamped as appropriate while extending along the sill longeron (maximum 18-inch span) and, at the top of the standard interface panel.

Because of the stiffness of the 0-American wire gauge (AWG) dc power cables, the bend radius is extremely large and must be considered when designing payload cable routing and departure points. Improper placement of the harnesses as they exit the payload structure can produce an excessive amount of unsupported cable length.

8.2 Nonstandard Wiring

The preferred implementation of the orbiter/ payload avionics interface using a standard interface panel is explained in section 8.1. Other methods are acceptable but must be negotiated with the SSP. One common method is to use SSP-provided jumper cables instead of interface cables to interconnect the standard interface panel and the payload. The payload has a connector panel mounted where the exiting cables would be clamped. An approach acceptable only for fixed-position cable interfaces also utilizes a payload-mounted connector panel, but the orbiter cables are routed directly to the panel rather than terminating at a standard interface panel.

For payloads which do not require the full allotment of primary payload dc power, a power accommodation terminal (PAT) may be a feasible option. The primary payload 0-AWG dc power cable (or 4-AWG aft power cable) is terminated at the PAT. Up to four 8-AWG power outlets, each fused at 35 A, are then available for routing to a standard interface panel or other orbiter/payload interface. Each of the four power outlets consists of three 8-AWG wires: power, return, and fault bond.

The PAT has been certified for use with the Orbiter APCU provided 124 V DC power. The PAT accepts power from the APCU via one of the four 8-AWG connectors, and can distribute it to users via the other connectors.

Besides the standard interfaces to customer-provided GSE, up to six 12-AWG, HO-classified circuits through the T-0 umbilical can be provided to the payload at the starboard orbiter/payload interface. For these circuits, KSC also provides large-gauge wiring to reduce the voltage drop between GSE and the payload. Each of the six circuits can deliver up to 22 amps of dc power to the payload. If these circuits are not used by any payload manifested, the KSC large-gauge wiring distribution system can be substituted for the higher resistance facility circuits which connect to three specific HO circuits of the 12 circuits interfacing with the payload of the port standard interface panel connector J102.

8.3 Remotely Operated Electrical Umbilical

The remotely operated electrical umbilical (ROEU) mounts on the port or starboard bridge rail parallel to the X_0 axis in the demated stowed position. The mate/demate operation will be commanded from the AFD (A6A1 panel) using payload retention latch control logic. The ROEU accommodates a full one-quarter SMCH (signal and power). There are extravehicular activity (EVA) provisions for mating and demating.

A complete description of the ROEU is available in the JSC document JSC 23004, Remotely Operated Electrical Umbilical User's Manual.

As shown in Figure 8-3, the one-quarter SMCH connects to one end of the ROEU and the payload connector connects to the opposite end.

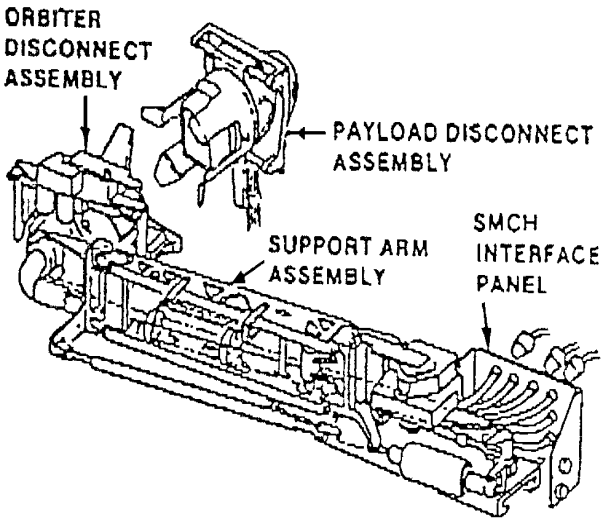

Figure 8-3.- Remotely operated electrical umbilical (ROEU).

8.4 Payload Power Switching Unit

The payload power switching unit (PPSU) is designed to provide the capability for command, data feedback, via Standard Switch Panel (SSP) and distribution of 0 AWG and 4 AWG 28 V DC power. The PPSU provides 2 each 8 AWG outputs per system A and system B.

The system is designed to mount on either the port or starboard wire tray at any location defined for the wire tray foldback cover. In addition, an adapter plat has been designed which allows mounting of the PPSU on an Adaptive Payload Carrier (APC) at any applicable payload bay location.

The PPSU and typical payload bay installation are shown in Figure 8-1.

8.5 Station Power Distribution Unit

The station power distribution unit (SPDU) is designed to distribute 124 V DC APCU power to downstream loads in the payload bay. The SPDU has two input connectors with 8 AWG pins. Each connector is powered by a separate APCU. The SPDU has two EVA compatible (NZGL type) output connectors. Each SPDU output connector provides 4 fused (7.5 A), de-rated to 3.75 A, 16-gauge pins and 4 corresponding 16 gauge return pins. The SPDU output connectors also support a fault bond between the Orbiter and the Payloads. See Figure 8-2 for an SPDU wiring schematic.

8.6 Interface Connectors

ICD 2-19001 lists the NASA and Rockwell specifications for those connectors that have been certified for use in the shuttle program. Customers may also use connectors which carry the vendor part number when they are as shown in Tables 8-I, 8-II, 8-III, and 8-IV.

TABLE 8-I.- SPECIFICATION 40M38277 CONNECTOR CORRELATION DATA

40M38277	BENDIX	ITT
NLS0E16-35S	10-475305-35S	KJ3E16N35SN16
NLS0T12-35S	10-475413-35S	KJ3T12N35SN16
NLS0T16-35SA	10-475415-35SA	KJ3T16N35SA16
NLS0T16-35SB	10-475415-35SB	KJ3T16N35SB16
NLS0T20-35S	10-475417-35S	KJ3T20N35SN16
NLS0T20-35SA	10-475417-35SA	KJ3T20N35SA16
NLS0T20-35SB	10-475417-35SB	KJ3T20N35SB16
NLS6GT10-35P	10-475432-35P	KJG6T10N35PM16
NLS6GT10-35S	10-475432-35S	KJG6T10N35SN16
NLS6GT10-35PA	10-475432-35PA	KJG6T10N35PA16
NLS6GT12-35P	10-475433-35P	KJG6T12N35PN16
NLS6GT12-35S	10-475433-35S	KJG6T12N35SN16
NLS6GT12-35PA	10-475433-35PA	KJG6T12N35PA16
NLS6GT14-35P	10-475434-35P	KJG6T14N35PN16
NLS6GT14-35S	10-475434-35S	KJG6T14N35SN16
NLS6GT14-35PB	10-475434-35PB	KJG6T14N35PB16
NLS6GT14-35PC	10-475434-35PC	KJG6T14N35PC16
NLS6GT16-35P	10-475435-35P	KJG6T16N35PN16
NLS6GT16-35S	10-475435-35S	KJG6T16N35SN16
NLS6GT16-35PA	10-475435-35PA	KJG6T16N35PA16
NLS6GT16-35PB	10-475435-35PB	KJG6T16N35PB16
NLS6GT16-35PC	10-475435-35PC	KJG6T16N35PC16
NLS6GT16-35PD	10-475435-35PD	KJG6T16N35PD16
NLS6GT18-35P	10-475436-35P	KJG6T18N35PN16
NLS6GT18-35S	10-475436-35S	KJG6T18N35SN16
NLS6GT20-35P	10-475437-35P	KJG6T20N35PN16
NLS6GT20-35S	10-475437-35S	KJG6T20N35SN16
NLS6GT20-35PA	10-475437-35PA	KJG6T20N35PA16
NLS6GT20-35PB	10-475437-35PB	KJG6T20N35PB16
NLS6GT20-35SA	10-475437-35SA	KJG6T20N35SA16
NLS6GT20-35SB	10-475437-35SB	KJG6T20N35SB16
NLS6GT20-35SC	10-475437-35SC	KJG6T20N35SC16
NLS6GT20-35SD	10-475437-35SD	KJG6T20N35SD16
NLS6GT22-35P	10-475438-35P	KJG6T22N35PN16
NLS6GT22-35S	10-475438-35S	KJG6T22N35SN16
NLS6GT22-35SA	10-475438-35SA	KJG6T22N35SA16
NLS6GT22-35SB	10-475438-35SB	KJG6T22N35SB16

TABLE 8-II.- SPECIFICATION 40M39569 CONNECTOR CORRELATION DATA

40M39569	DEUTSCH	ITT CANNON
NB6GE12-10PNT2	38180-12-32PN-1A	PV6B12S32PN16
NB6GE12-10PWT2	38180-12-32PW-1A	PV6B12S32PW16
NB6GE12-10PNT3	----------	PV6B12S32PN16
NB6GE12-10PWT3	----------	PV6B12S32PW16
NB6GE14-4PNT2	28180-14-4PN-1A	PV6B14S4PN16
NB6GE14-4PNT	38180-14-4PN-1A	PV6B14S4PN16
NB6GE14-19PNT3	----------	PV6B14S19PN16
NB6GE14-19SNT3	----------	PV6B14S19SN16
NB6GE18-8PNT2	38180-18-8PN-1A	PV6B18S8PN16
NB6GE18-PNT3	----------	PV6B18S8PN16
NB6GE18-32PNT3	----------	PV6B18S32PN16
NB6GE18-32SNT3	----------	PV6B18S32SN16
NB6GE22-55PNT2	38180-22-55PN-1A	PV6B22S55PN16
NBOE10-6SNT3	----------	PV6B10B6SN16
NBOE14-19SNT3	----------	PV6B14B19SN16
NBOE18-8SNT3	----------	PV6B18B8SN16
NBOE18-32SNT3	----------	PV6B18B32SN16

TABLE 8-III.- ROCKWELL MC AND ME SPECIFICATION CONNECTOR CORRELATION DATA

MC414-0614-0011 = SEALECTRO CORP. 50-607-0359-89

ME414-0234-7222 = ITT CANNON* CVA0R36-5S-16
ME414-0235-7101 = ITT CANNON* CVA6R20-24P-16
ME414-0235-7226 = ITT CANNON* CVA6R36-5P-16
ME414-0235-7229 = ITT CANNON* CVA6R36-5S-16
ME414-0235-7244 = ITT CANNON* CVA6R32-17P-16
ME414-0250-0306 = ITT CANNON* 053147-0056

* also time elect. west

TABLE 8-IV.- SPECIFICATION 40M39569 CONNECTOR CORRELATION DATA

40M39569	MIL SPEC
NB0E14-12PNT2	MS3470L14-12P
NB0E12-10PNT2	MS3470L12-10P
NB0E14-4PNT	MS3470L14-4P

Small Payload Accommodations

9

9.1 Electrical Power

The only electrical power available to small payloads is primary payload dc power at reduced power levels. The SMCH power cable, consisting of three 0-AWG wires (28-dc power, return, and structure ground), is terminated at a small payload accommodation terminal (SPAT). Within the SPAT, a transition is made from the 0-AWG wiring to two cables (each with 35-A fusing) consisting of three 8-AWG wires per cable: power, return and structure ground.

Interface requirements, capabilities, limitations, and specific characteristics of orbiter electrical power allocated to small payloads are defined in Shuttle/Payload Interface Definition Document for Small Payload Accommodations, NSTS 21000-IDD-SML.

The maximum electrical dc power allocated for a small payload is 1500 W and is only available during orbital and ground operations. To avoid manifesting and operational constraints, small payload customers should minimize electrical power demand. Power is limited to less than 300 W during any required warm-up period or standby modes when the payload is not fully operational.

Voltage levels are defined at the orbiter/payload interface, standard interface panel, or payload structure-mounted interface panel. The maximum level is 32.0 Vdc; and minimum levels are defined in NSTS 21000-IDD-SML over the range of power allotted for small payloads.

Payload electrical power distribution circuitry shall be designed so that electrical faults do not damage orbiter wiring or present a hazard to the orbiter or crew. Circuit protection devices and wire sizes shall be selected in accordance with NSTS 18798 and incorporated into the payload design in each of the following cases:

a. When orbiter wiring is to be energized from a payload power bus

b. When a payload power distribution wiring is located within a crew habitable volume

c. When payload redundant safety critical power has been derived from a single approved orbiter source

d. When energized payload power distribution circuits are routed through wire bundles containing circuits which, if energized, would potentially bypass or remove more than one inhibit to a hazardous function

Case b. does not apply to power distribution circuitry inside payload electronics boxes. All other cases apply.

Orbiter power wiring at the interface consists of three 8-AWG conductors: one each for power, return. Two identical cables, providing power from the same source, are available to the payload; since both furnish power from the same source, the cables may be paralleled on the payload side. The 8-AWG power wires must be maintained on the payload side until a suitable bus arrangement with current limiting compatible with smaller gauge wiring can be established. A typical fusing diagram is shown in Figure 3-1. See NSTS 18798 for circuit protection device rating information and wire protection criteria.

Payloads must have a continuous bond path between payload equipment, payload structure, and orbiter structure. The bond between payload structure and orbiter structure is typically established by connecting the structure grounding wire in the orbiter power cable to structure on both sides of the interface.

When mating and demating electrical connectors during ground operations, all power must be removed from the connectors. Connectors will not be mated or disconnected during flight.

9.2 Command and Data Services

Orbiter accommodations for the small payloads include the following:

- PDI - collects data for telemetry to ground stations to monitor experiment data and subsystem health status
- PSP - initiates and/or deactivates subsystems operations
- KUSP - transmits payload digital data to the ground through the TDRSS
- Orbiter timing buffer service - time tags data and/or synchronizes subsystems using MET
- Small payload accommodations switch panel (SPASP) sends switch-closure commands to payloads and receives talkback signals from payloads.

A block diagram of the small payload accommodations is shown in Figure 9-1.

9.2.1 Command and Data System

Payload data processing and monitoring are provided onboard the orbiter and by the customer at the POCC. Orbiter provision of payload telemetry data to a POCC is time-shared with other payloads. The SPASP provides hardwired, onboard display capability, and the PDI and KUSP provide telemetry downlink capability. The SM GPC supports single-stage throughput commands to the payload.

9.2.2 Data Processing System

Other than single-stage throughput commands, no orbiter SM GPC software supports small payload command services. The orbiter does not validate these commands.

9.2.3 Small Payload Accommodations Switch Panel

The SPASP has six switch closures and six status indicators (talkbacks) for payload use. These functions, which are hardwired to the payload, can be used on orbit by the crew during active payload operations. Overlay panels identify specific payload functions. SPASP interface requirements and characteristics are defined in NSTS 21000-IDD-SML.

9.2.4 Payload Signal Processor

The PSP sends serial digital commands generated at a POCC and relayed to the orbiter through the MCC-H to a small payload. Uplink commands are transmitted from the ground to the orbiter through the S-band or Ku-band link. The commands are processed through the orbiter data system and then sent from the PSP to the small payload. A maximum of 64 16-bit command words for each command transmission at nine burst rates up to 2-kbps can be sent to the payload by the PSP. Interface requirements and characteristics of the command signal to the payload are defined in NSTS 21000-IDD-SML. Uplink commands to a small payload from the PSP must be time-shared with other payloads.

9.2.5 Payload Data Interleaver

The PDI provides one input for a small payload. This input processes biphase data in type 1, 2, or 3 format at eight kbps during on-orbit operations. Block format data, although not recommended, can be utilized by the payload in certain circumstances. In block mode, the PDI accepts all incoming data, adds a sync pattern and status bits, and passes the same to its toggle buffer for access by the PCMMU. Data is interleaved into the operational telemetry downlink by the PCMMU.

PDI data at the MCC-H is available for transmission to POCC.

PDI electrical interface requirements and characteristics are defined in NSTS 21000-IDD-SML.

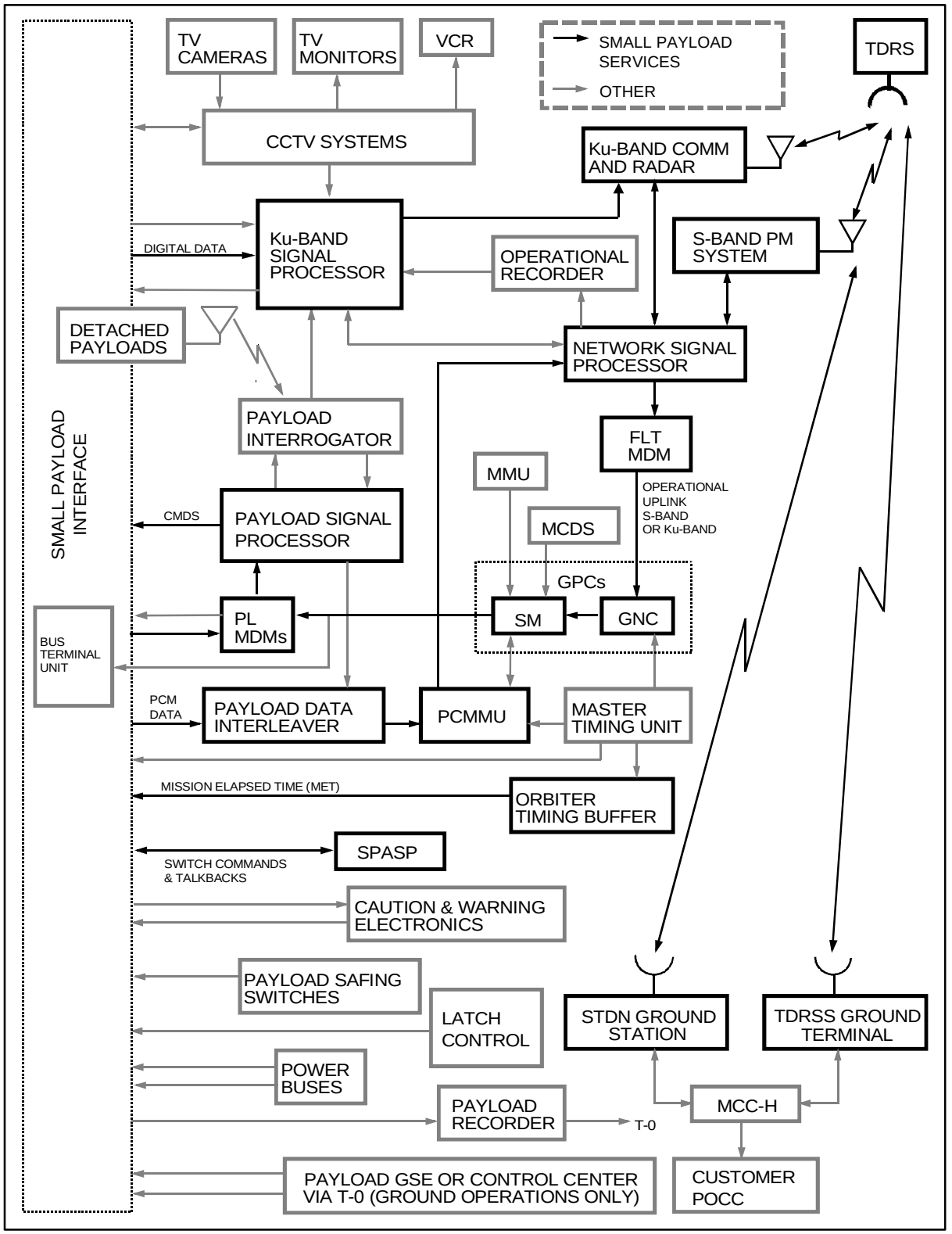

Figure 9-1.- Small payload accommodations.

9.2.6 Ku-band Signal Processor

The KUSP provides a small payload input for NRZ-L coded data at rates of 16 kbps to two Mbps. A payload KUSP requirement is a significant manifesting constraint. The channel is time-shared with operational recorder dump and bent pipe data from the PI. Small payload modulate an 8.5-MHz subcarrier which modulates the Ku-band carrier. Electrical interface requirements and characteristics of the KUSP are defined in NSTS 21000-IDD-SML, and data availability will be defined in the PIP.

9.2.7 Timing

Small payloads are provided one MET time code output in modified IRIG-B time code format from the orbiter timing buffer. Interface requirements and signal characteristics are identified in NSTS 21000-IDD-SML.

9.3 Wiring and Harnesses for Small Payloads

The orbiter electrical interface with small payloads consists of three cables. One of the cables provides orbiter avionics services: timing, MET, and the PDI, PSP, KUSP, and SPASP interfaces. The other two cables provide the electrical power interface.

For trunnion-mounted payloads, orbiter cables are terminated at a standard interface panel in the payload bay. Electrical connector part numbers and pin assignments are specified in NSTS 21000-IDD-SML. The standard interface panel will be located just forward of the payload structure. Customer-provided extender cables are routed to the sill longeron and standard interface panel, to be mated with the top side of the feedthrough connectors mounted in the standard interface panel. Payload extender cables should be clamped down as near as possible to the forward part of the payload structure, and should exit in the $-X_0$ or forward direction. As extender cables are routed along the sill longeron, they will be clamped as appropriate at 18-inch intervals and again at the top of the standard interface panel. Detailed interface requirements are specified in NSTS 21000-IDD-SML.

For longeron/adaptor-mounted payloads, orbiter cables will be terminated at a standard interface panel on the starboard side of the payload bay in the same manner as trunnion-mounted payloads, or at a customer-provided interface connector panel. The second option requires placement of the payload interface connector panel 6 to 12 inches from the lower edge ($-Z_0$) of the payload structure (Figure 9-2). Provisions must be allowed for clamping the three orbiter cables to the payload structure as close to the lower edge of the payload structure as possible. The orbiter cables will be routed up from the SPAT and mated to the payload-provided interface connector panel. Detailed payload interface requirements are specified in NSTS 21000-IDD-SML. See section 8.5 for additional interface connector data.

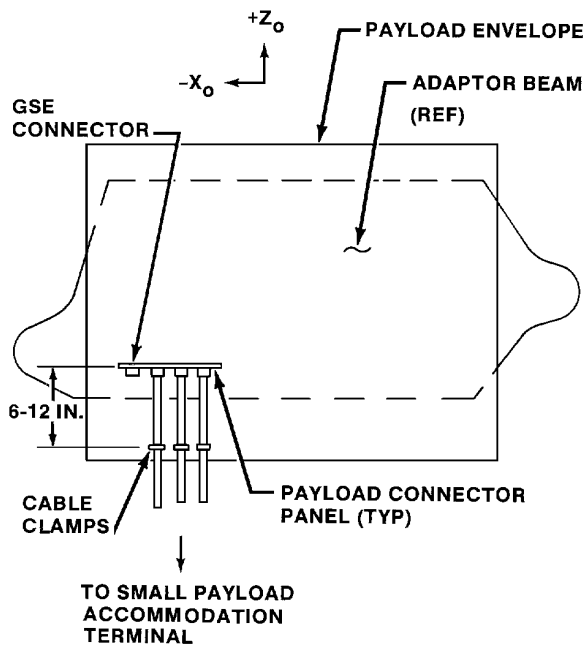

Figure 9-2.- Adaptor beam connector panel electrical interface.

9.4 Test and Verification

The SSP test philosophy for small payloads on the orbiter side of the interface is the same as for single section payloads but commensurate with the fewer interfaces of small payloads.

Payload-receiving inspection, postshipment testing, final assembly, and checkout are performed in the payload processing facility by the customer using customer GSE. The payload is then transferred to the Operations and Checkout (O&C) building for interface testing.

Interface verification tests are conducted by the SSP to verify all payload-to-orbiter interfaces as specified in Shuttle/Payload Standard Integration Plan for Small Payload Accommodations, NSTS 21000-SIP-SML.

Powered-up testing in the orbiter may not be required for small payloads with minimal avionics interfaces. In such cases, only the final connector mate is verified. The test will employ the interface verification test connector on the payload and will employ SSP.

9.5 Get-Away Special Payloads

The only orbiter avionics accommodation for the GAS payload is a payload controller which provides two-way digital communication between the AFD and the GAS payloads. The autonomous payload controller is a crew-operated, hand-held unit that sends commands to the GAS payload and receives responses to indicate execution of the commands. It can provide switch closure for a GAS payload by its capability to control a customer-provided compatible command decoder.

There are no orbiter power provisions for the GAS payload.

Premate verification of GAS payloads consists of wiring continuity verification from the standard switch panel interface with the payload controller to the GAS canister. After installation, the mated interface is verified by entering selected commands from the payload controller and checking command responses.

Middeck Payload Accommodations

10

10.1 Electrical Power

Avionics accommodations for middeck payloads are restricted to limited dc and ac electrical power. Electrical power is available to middeck payloads during ascent, on-orbit, and descents. Total power usage is limited by thermal constraints. DC power (28 V nominal) is available at middeck utility outlets MO52J, MO13Q, and MO30F, and is limited to 6A for standard payloads. No power is available during ascent/descent from ceiling outlet panels MO52J and MO30F. Ac power (115 Vac, 400 Hz) is accessible at middeck utility outlets MO52J, MO13Q, and ML85E. It is limited to 130 VA for standard payloads, and is available only on orbit. To minimize manifesting constraints, payload power requirements should be limited to 130 W dc (or equivalent ac) on orbit using normal utility outlets. Significantly higher power levels are available using the ML85E middeck utility panel (MUP) MO63P (Expansion Panel). An active cooling interface is available using the middeck accommodations rack (MAR). Standard cables can be provided for routing the power to the payload. Refer to Shuttle/Payload Interface Definition Document for Middeck Payload Accommodations, NSTS 21000-IDD-MDK, for detailed interface characteristics. Power is not available to payloads during ferry flight operations.

The SSP will attach identifying tags to customer-supplied power cables. Proper labeling reduces the potential for inadvertent connection or disconnection of the wrong cable during flight operations.

10.2 Command and Monitoring

Normally, command and monitoring of middeck payloads are limited to those controls, displays, and data collection features designed into the payloads. As an optional service, the SSP can provide the use of a PGSC to support inflight payload operations. The SSP can also provide the necessary power cable and data cables from the PGSC to the payload. For more information, see NSTS 21000-IDD-760XD.

10.3 Test and Verification

Typically, the only electrical interface between the orbiter and a middeck payload is an adaptor cable connected to a middeck dc or ac power outlet. Functional power verification is conducted at the payload interface. Post-installation verification of a middeck payload normally verifies that the payload is receiving power.

All crew compartment cables and wiring harnesses must undergo a preflight insulation resistance test or a high potential test. Customer-supplied dc power cables used in the orbiter crew compartment must be tested by the customer according to the test procedure in NSTS 14046.

Video

11

11.1 Accommodations Summary

Standard video accommodations include closed circuit television (CCTV), video recording, and video playback to the ground. Optional accommodations include an additional video cassette recorder (VCR), video cassettes and the Video Processing Unit (VPU). A block diagram of video accommodations is shown in Figure 11-1.

11.1.1 Closed Circuit Television

Onboard CCTV can downlink one 4.2-Mhz video channel. Two onboard color monitors are located in the AFD. Uplink video accommodations are not provided.

The CCTV system provides real-time television data from the orbiter to the ground through the orbiter Ku-band communication system. The CCTV system facilitates payload handling operations and crew monitoring activities. Video RF transmission and onboard display may be provided by signals from up to three payload and up to five orbiter cameras in the payload bay. Standard locations include two positions on the forward bulkhead and two on the aft bulkhead, a keel position, and two positions on the remote manipulator system (RMS) arm (one wrist and one elbow).

Installations may include cameras mounted on customer-provided cradles or hardware (utilizing orbiter junction and wiring capability) to support viewing requirements for payload deployment or berthing operations. Crewmembers can use a portable camera throughout the crew compartment of the orbiter and during EVA. Video data is displayed on two color CCTV monitors for the crew. A video switching unit (VSU) provides video data selection and distribution. A Remote Control Unit (RCU) provides remote control capability for all electronic functions for compatible orbiter cameras. The RCU also provides a master synchronization signal to be distributed to all CCTV system LRUs and payload TV system.

11.1.2 Split-Screen Video

The CCTV monitors in the aft cabin have split-screen capability. Each split-screen signal is composed of a left and right segment of equal size. The center of the selected camera scenes are displayed in the selected split-screen positions. This split-screen video image can be recorded on the VCR for subsequent playback to the ground, or transmitted directly to the ground in real time (but not simultaneously with VCR playback).

11.1.3 Video Control and Signals

The CCTV video control system sends and receives video, sync, and control signals to and from attached payloads. The orbiter will transmit selected payload video signals to ground facilities over the Ku-band link on a time-available basis.

Video signal characteristics are specified in ICD 2-19001.

11.1.4 Video Recording

A VCR is provided to record CCTV signals and play recorded video to the VSU for onboard transmission through the Ku-band system to the ground.

The VCR is an optional service which must be negotiated with the SSP and documented in the PIP.

11.1.5 Video Processing Unit

The Video Processing Unit (VPU) provides the capability to patch any of the six video inputs shown in Figure 11-2 to the CCTV PL2 video input. The VPU buffers one CCTV sync signal input to four sync outputs for routing to four external video

sources. The VPU also provides five front panel connectors for external interfaces. The VPU provides a mounting location and electrical interfaces for the Wireless Video System (WVS).

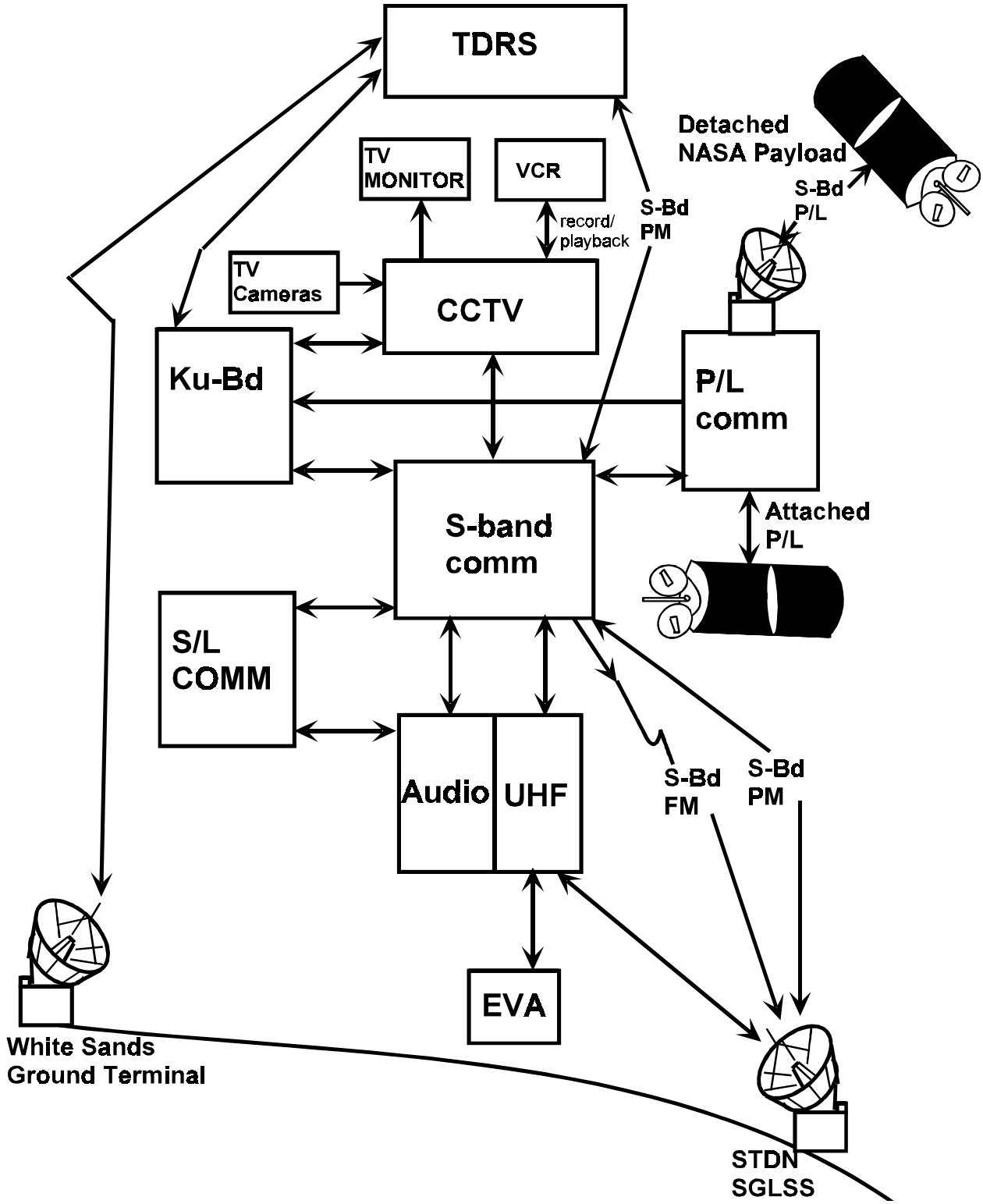

Figure 11-1.- Orbiter video accommodations.

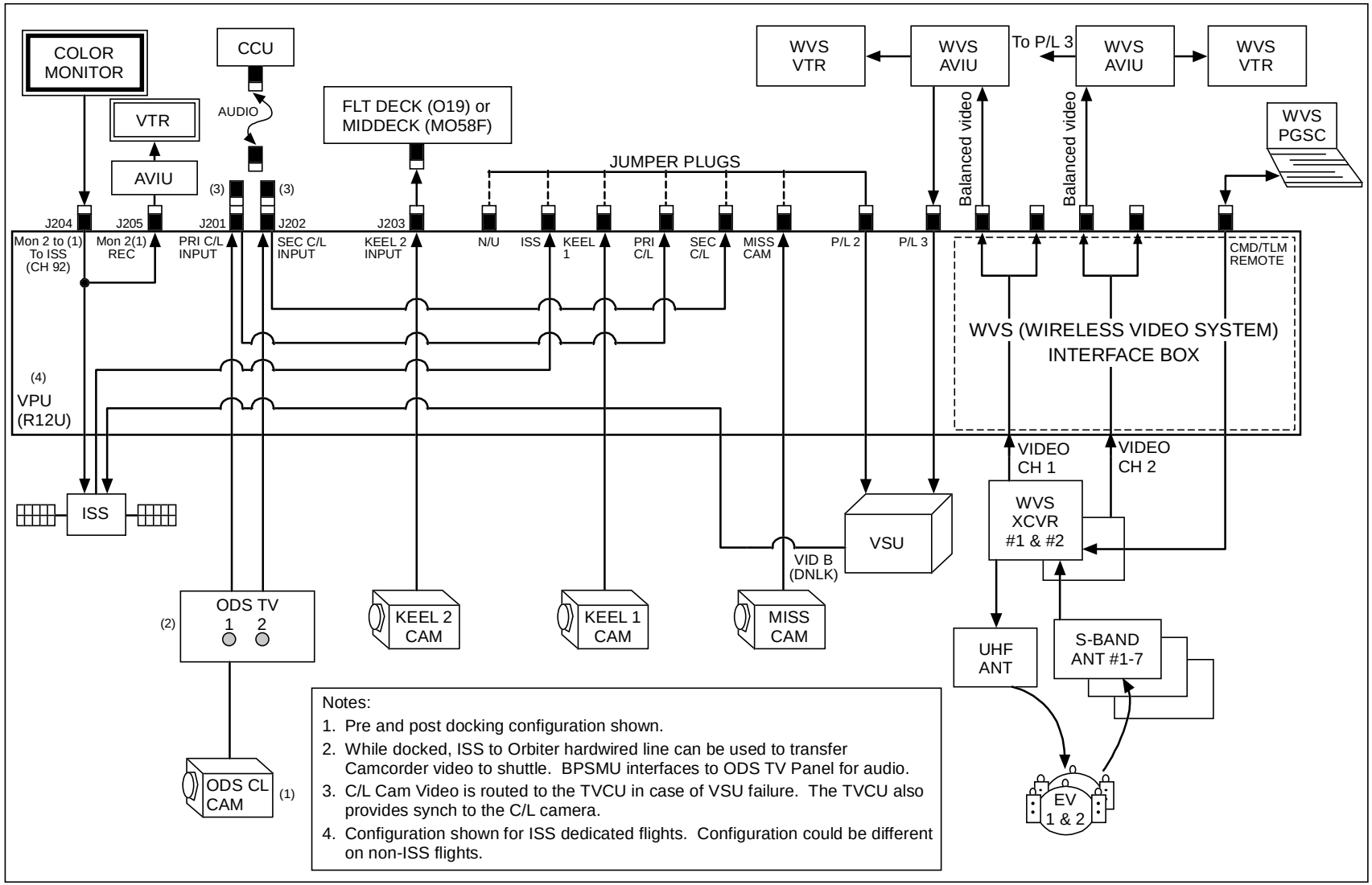

nsts0700_v14_fig11-2.cvs

Figure 11-2.- VPU overview.

Electromagnetic Compatibility Effects and Requirements

12

12.1 Environments

Isolation requirements for electromagnetic radiated and conducted emissions and power/signal cable harnesses are defined in ICD 2-19001. This ICD describes the orbiter-to-payload, payload-to-orbiter, and payload-to-payload emissions which constitute the electromagnetic environment. EMC is defined as the condition when telecommunications equipment collectively performs its designated functions in a common environment without unacceptable degradation from electromagnetic interference from other equipment or systems in the same environment.

Interface definition documents (IDD's) describe environments. Launch and landing site environmental limits are described in the following documents:

- Space Shuttle Launch Pad and Platform, ICD 2-0A002 - The section regarding orbiter electrical and electronic requirements.
- STS OPS Flight PRD Vol II Payload Annex 17 OSTA-3, JSC 16719, Volume I - The section regarding RF impingement on the orbiter. (See Figure 12-1.)

Laser and laser systems hazard safety requirements are also defined in ICD 2-19001. The requirements follow the ANSI Standard, ANSI Z136.1-2000, "American National Standard for Safe Use of Lasers." The standard provides guidance and defines control measures (for each of four laser classifications) which protect the pilot and crew from unsafe laser exposure.

12.2 Electromagnetic Compatibility Tailoring

Space Shuttle payloads may be exposed to a complex spectrum of RF emissions. The guidelines below are presented to maximize payload EMC and minimize RF discrepancies; their benefits include enhanced payload manifesting opportunities, improved operational flexibility, and more efficient utilization of shuttle on-orbit communications capabilities.

The shuttle-generated electromagnetic environment and the worst-case RF emissions radiated from payloads in the payload bay are defined in ICD 2-19001 and NSTS 21000-IDD-ISS. Payloads should be designed to limit payload emissions to these field strength levels and tolerate emissions at the same levels from other sources. Any performance deviations waivers are documented in the payload-unique ICD.

Operational restrictions are sometimes imposed on orbiter transmitters. For example, the orbiter S-band network transponder requires low-frequency operation if a payload uses the high end of the S-band spectrum, and vice versa. Any such restrictions will be specified in the PIP.

Payload RF susceptibility threshold levels provided to the SSP must not be overly conservative. Because of the known field strength of the electromagnetic environment in and around the payload bay, the SSP recommends that customers with RF-sensitive equipment conduct a full-scale EMC program tailored to the expected environment. Ideally, this should include tests or detailed analyses to determine the true threshold levels of payload susceptibility. Payloads should be qualified to no less than the exposure levels described in the payload-to-payload field strength versus frequency curve in ICD 2-19001.

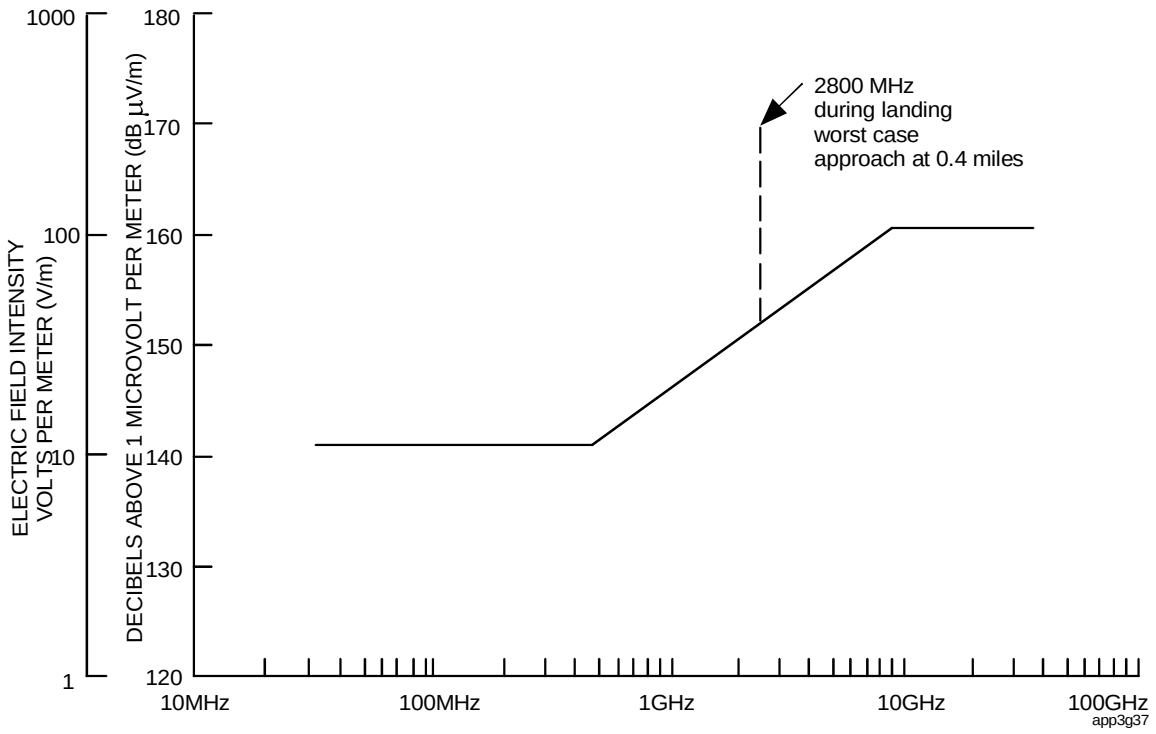

Figure 12-1.- Maximum allowable electric field intensity versus frequency impinging on space shuttle during launch and landing.

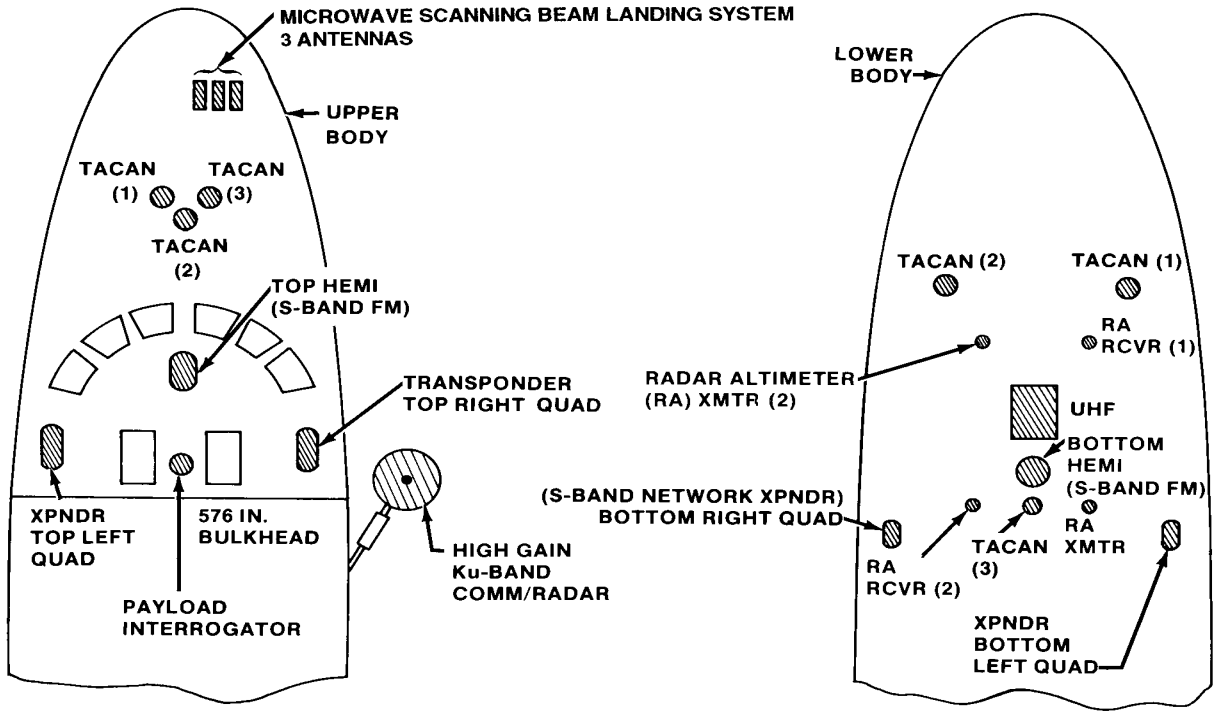

Figure 12-2.- Orbiter antennas.

If required by the customer, payload suppliers must demonstrate a radiated susceptibility safety margin. For example, if Electromagnetic Compatibility Requirements, Systems, MIL-E-6051, is imposed on the supplier, then a 6 dB safety margin is required, and qualification testing should be conducted at field strength levels of 6 dB greater than the environment. The customer and the SSP should exchange information on unique intentional or unintentional emissions early in the conceptual phase of payload development. This information should be updated periodically during the integration process.

12.3 Conducted Emissions

Ripple and transient limits for payloads are provided in ICD 2-19001.

12.3.1 Ripple

Payload-generated ripple is evaluated by comparing test results with the ICD 2-19001 limits mentioned above. If exceedances occur, averages are compared against a chart depicting orbiter avionics emissions and susceptibilities. This chart is updated on a regular basis. If no conflict is apparent, the overlimit ripple current in decibels above a microampere (dBμA), root-mean-square, is converted to peak-to-peak ripple voltage. The ripple current is multiplied by orbiter dc bus impedance at the overlimit frequency (ICD 2-19001), the product is multiplied by a factor of 2.82 (9-dB increase). This peak-to-peak voltage is then compared to the ripple voltage requirements in ICD 2-19001 to determine if a waiver is justified. However, no deviation is allowed for any overlimit ripple between 700 Hz and 3.5 kHz, due to the nature of the conducted emission limit curve and the orbiter dc power source impedance versus frequency curve.

12.3.2 Transients

Payload-generated transient and spike excursion limits vary as a function of the time duration. Note that the allowable voltage excursion is severely reduced after 0.00005 second in ICD 2-19001. During transient and ripple generation tests, a bank of batteries simulates the load characteristics of the orbiter fuel cells as a power source more accurately than a regulated power supply. Quite often, over-limit transients are generated by the commercial power supply regulator response characteristics and not the equipment under test. The oscilloscope's time sweep should be fast enough for accurate determination of rise and fall times and amplitudes from the recorded data.

12.4 Intentional Space Shuttle Radiated Emissions

Intentional Space Shuttle radiated emissions are described for the payload bay in ICD 2-19001 in a figure entitled "Maximum Field Intensities on Payload Envelope." The Ku-band system has a software obscuration mask to preclude exposure of the standard payload envelope to the main beam. This provides a 9 V/m field intensity limit in the payload bay envelope. The obscuration mask for a volume outside the payload bay and over the cabin may be enlarged using a computer-controlled capability which enables ground personnel or the crew to alter the mask parameters by keyboard entry. This capability may be negotiated with the SSP. The larger the solid-angle coverage of the mask, the smaller the coverage of the TDRSS communication link.

The Ku-band main beam field levels for the communication modes and radar modes are plotted in ICD 2-19001, and NSTS 21000-IDD-SML, Shuttle/Payload Interface Definition Document for Small Payload Accommodations. Experimental evidence shows that some long-wave infrared (IR) sensors are temporarily upset by exposure to Ku-band field intensities above 30 V/m. IR devices should be tested to determine upset thresholds if sensors will be used in or around of the orbiter. Relative orbiter antenna locations are shown in Figure 12-2.

S-band fields in the hemisphere over the orbiter cabin are shown in ICD 2-19001.

If the Space Shuttle Tactical Air Navigation system (TAN) landing aid system (L-band), is activated on orbit, and is a payload concern, the issue should be addressed during PIP negotiations.

Payloads in the cabin and airlock will be exposed to the crew personal wireless communicators and bulkhead communicators, constituting the wireless crew communicator system (WCCS). There are 500 FM duplex channels available to the crew; eight channels are the maximum in use at one

time. The frequency band ranges from 340 MHz to 390 MHz, and maximum electric field intensity is less than 2 V/m at one meter.

12.5 Unintentional Space Shuttle Radiated Emissions

These emissions are described in the shuttle-produced payload bay radiated broadband emissions curve and narrowband curve in ICD 2-19001, which are envelopes covering peak emissions. Ac and dc magnetic fields are also described in ICD 2-19001.

Shuttle-produced cabin radiated broadband and narrowband emissions curves are described in NSTS 21000-IDD-MDK.

12.6 Payload-Radiated Emissions

Intentional emissions limits are described in ICD 2-19001. Of particular importance is the figure entitled “Allowable Field Strength in Payload Bay.” The following guidelines are used for reviewing waiver requests when radiation limits are exceeded:

- If the radiated field emanates from a directional antenna located above Z_0 410 inches and the antenna boresight is up and out of the bay without obstructions, a waiver is usually granted.
- If the overlimit condition is slight and the payload-to-orbiter impingement in the $-Z_0$ direction, is predominantly aft of X_0 900 inches, a waiver is usually granted.
- Waivers are not granted if analysis or test indicates that the overlimit fields transmitted through the cabin rear windows (No. 9 and No. 10) result in high field intensities in the cabin.
- Waivers are not granted based on:
  - An assumed payload bay location in a mixed cargo manifest
  - An assumed payload activation and deployment sequence
  - An assumed mix of particular cargo elements

If overlimit intentional radiations from a payload cannot be waived, a hazard assessment is conducted by the SSP to determine if there are enough inhibits to preclude radiation in the payload bay. For critical hazards, there must be two inhibits (one-fault tolerance). For catastrophic hazards, there must be three inhibits (two-fault tolerance). See NSTS 1700.7B, for definitions and more detail. Of particular interest are paragraphs which apply to non-ionizing radiation.

Unintentional emissions limits are described in ICD 2-19001.

12.7 Broadband Electric Field Emissions

The only concern for broadband emissions is whether any overlimit segment of the spectrum from 14 kHz to 10 gigahertz (GHz) falls into the 60 dB passband of any orbiter receiver or payload receiver.

12.8 Narrowband Electric Field Emissions

There are three concerns for overlimit narrowband emissions:

- Does any overlimit frequency “spur” fall into the 60 dB passband of any orbiter receiver or payload receiver
- Does any overlimit “spur” amplitude exceeds a level 12 dB below the susceptibility threshold test level of any orbiter avionics element
- Does any payload contain devices that emit high-energy electromagnetic or particle beams, and if so, are there any undesirable RF emission by-products that are within the frequency passbands of Space Shuttle or payload receivers

12.9 Alternating Current Magnetic Fields

If the magnetic field at any frequency from 30 Hz to 2 kHz exceeds the limits defined in ICD 2-19001, a waiver may be granted depending on geometric relationships to orbiter equipment and other cargo elements.

12.10 Cargo Susceptibility

Cargo susceptibility requirements are a contractual issue between the payload supplier and the customer, and outside the scope of ICD documentation except for safety matters. However, payload suppliers and customers are advised that payloads should be EMC-qualified for the environment (radiated and conducted) generated by the orbiter and other cargo elements in a mixed cargo manifest. Cargo susceptibility thresholds should be higher than the environment, plus any safety margin requirements. The practice of testing to environmental levels and then requesting that the Space Shuttle and cargo elements reduce emissions to accommodate contracted safety margins is not acceptable.

12.11 Interface Cable Classifications and Routing

Orbiter interface cables are assigned EMC classifications by the type of signal carried. Coupled interference between wire bundles is prevented by providing minimum edge-to-edge separation between wire bundles of different EMC classifications. See ICD 2-19001.

12.11.1 Orbiter Wire Treatment, Bundling Electromagnetic Compatibility Classification and Separation

The orbiter wiring scheme (including SMCH cabling) is based on the requirements of ICD 2-19001. Strict adherence to these requirements has resulted in no identified orbiter EMI anomalies on Space Shuttle flights.

12.11.2 Payload Requirements

Payload circuits must meet EMC signal classifications at orbiter/payload interfaces.

In some instances, payload cable bundles are routed with orbiter cables. To preclude coupling of interference into orbiter circuits, payload signals shall be routed in wire bundles of the proper EMC classification.

12.12 T-0 Umbilical and Payload Ground Support Equipment Requirements

ICD 2-0A002 limits radiated and conducted emissions of power circuits routed from GSE through the T-0 umbilical to installed equipment in the payload bay. This prevents coupling of interference to orbiter or other payload circuits.

12.12.1 T-0 Signal Grounding and Isolation Requirements

GSE circuits routed through the T-0 umbilical must meet the signal grounding and isolation requirements of ICD 2-0A002. This prevents compromising the orbiter single-point grounding scheme concept, thus eliminating signal ground loops.

12.12.2 T-0 Radiated and Conducted Emission Requirements

All payload T-0 circuits must meet the conducted and radiated emission requirements of the lower limits of ICD 2-19001, which are identical to Electromagnetic Interference Characteristics, Requirements for Space Shuttle Equipment, SL-E-0002.

12.13 Electroexplosive Devices

Payload Electroexplosive Device (EED) circuit shields must be continuous from the current initiating source to the EED case. EED connectors must have RF-conductive backshells with provisions for 360-degree circumferential termination. All EED components and circuitry must meet the requirements of Space Shuttle System Pyrotechnic Specification, NSTS 08060, or

NSTS 1700.7B. Due to the potential hazard to flight safety presented by pyrotechnics, EED circuits must be certified to have a 20 dB safety margin by test or analysis.

12.14 Bonding Overview

Sometimes a vehicle or system grounding scheme connections have to be made or changed. Wherever connections or bonds are made to this grounding system or ground plane, different parts must be joined at many points and function properly at various temperatures, voltages, and currents. They are also subject to mechanical stress and corrosion. When a bond carries high-frequency currents, unique additional requirements are necessary, such as short lengths and very low-impedance joints. The latter are made possible by large faying surfaces or connectors. In some cases, jumpers are required to have specific cross-sectional geometries to reduce inductive reactance, thereby reducing impedance. See Bonding Specifications, Electrical, NSTS 37330. Three of the six bonding classes are relevant for payload integration purposes; these are Class C, current path return; Class R, RF potentials; and Class S, static charge.

12.14.1 Class C, Current Path Return or Fault Current Bonding

Fault current bonds are required to carry larger than maximum operating currents, and must be capable of carrying enough currents to open fuses, circuit breakers or other circuit protection devices rapidly in case of a short circuit or fault current path. Bond resistance should not exceed the requirements of the maximum bond resistance curve (lower curve) in NSTS 37330 to preclude overheating of the bond joint. See paragraph 13.1.3.

12.14.2 Class R, Radio Frequency Potential Bonding

RF circuits are defined in ICD 2-19001. NSTS 37330 requires testing of the contractor's proposed bonding method. The results must demonstrate in a direct current impedance of less than 2.5 milliohms (mΩ) from enclosure to structure, which is often difficult to achieve. Further information on RF bonding is in paragraphs 12.15.4, 13.1.3, 13.1.4, 13.1.5.

12.14.3 Class S, Static Bonding

See paragraphs 13.3, 13.18, and 13.19 for static bonding reference information.

12.15 Wire Shielding

Because circuits carrying RF signals generate high levels of radiation, they must be shielded to reduce RF radiation and coupled interference to adjacent circuits. Low-level signal circuits are shielded for protection against RF radiation and coupled interference. See ICD 2-19001.

12.15.1 Low-Level (0 to 5 Volts) Single-Ended Analog Circuits

The shield should be single-point grounded to prevent low frequency ground currents from being coupled to low-level, single-ended circuits. The shield should be floated at the low-impedance end of the circuit (usually the signal output). The shield should be carried through on connector pins at intermediate interface connectors and grounded to the connector backshell at the high-impedance end of the circuit (usually the receiver circuit). Orbiter SMCH cables provide single-point grounding shields only for payload low-level (0- to 5-V) signal circuits.

12.15.2 Low-Level (0 to 5 Volts) Analog Differential and Discrete Signals

Shields may be grounded at the source and load and at all intermediate connectors on the payload side of the interface. Since differential circuits have high common mode rejection characteristics, the coupling of low-frequency ground current interference associated with multipoint grounded shields is not a significant problem. The multipoint grounding of shields on the payload side of the interface may be implemented.

12.15.3 High-Level (28 Volts) Commands and Discretes

These circuits are routed with 28-Vdc power circuits and are not shielded. If special

applications require shielding, the shields should be grounded at all interfaces.

12.15.4 Radio Frequency Signal Circuits

These circuits shall be grounded at the source and the load and at all interfaces. Multipoint grounded shields provide higher attenuation of RF energy than single-point grounded shields.

Electromagnetic Compatiblity Services

13

13.1 Electromagnetic Compatiblity Assessments

Early incorporation of EMC solutions to interface conflicts within a payload design can prevent expensive, time-consuming changes. Consultation with the payload integration manager (PIM) and/or EMC group for resolution of interface problems should occur well before the Cargo Integration Review, Payload Operations Working Group meetings, technical interchange meetings, ICD meetings, and PIP meetings. Even if the RF and EMC test data required for payload EMC verification are only partially completed, and early partial submittal is strongly recommended. EMC assessments include:

- RF beat frequency analysis
- Payload bay allowable field strength assessment
- Cabin allowable field strength assessment
- Payload-conducted emission test data assessment
- Payload unintentional broadband and narrowband radiated emissions
- Grounding and bonding issues, including:
  - RF potentials
  - Fault currents
  - Electrostatic discharge
  - Ground loops
  - Shielding techniques
  - Wire and cable routing
- A review of all payload-unique ICD preliminary interface revision notices
- Issuance of discrepancy notices for board review

13.2 Beat Frequency and Field Strength Analysis

The electromagnetic compatibility frequency analysis (EMCFA) computer program analyzes possible interferences between transmitters and receivers, determines direct and intermodulation product interferences, and computes the amplitude of the interferences.

Interference frequencies may be coupled into receivers in two ways. In the first case, undesired signals mix with other signals in the receiver mixing stage and cause interference. The undesired signals combine in the receiver mixer, generating a number of new frequencies. If the unwanted signals generated in the mixer are within the intermediate frequency (IF) passband and have sufficient amplitude, they are accepted by the IF amplifier as desired signals. In the second case, interference results from the mixing of two or more transmitted frequencies incident on a nonlinear element external to the receiver antenna. When more than one signal is incident on a nonlinear junction, sums and differences of the original signals' fundamentals and harmonics are generated and the phenomenon is known as intermodulation. These intermodulated signals can be radiated by the junction and coupled into the receiver antennas. These signals may cause receiver interference when the signals contain frequencies that fall within the receiver passband.

13.2.1 Payload Transmitter, Receiver, and Antenna Data Input

Payloads with RF transmitter and/or receiver systems must provide the data outlined in NSTS 21288, Required Data/Guidelines for Payload/Shuttle Electromagnetic Compatibility Analysis, even if system activation is not planned until after separation from the orbiter. In this case,

data provided will be used to assess the payload receiver damage threat from the activated orbiter and other payload transmitters. Classified or proprietary data will be secured accordingly.

13.2.2 Launch and Landing Radio Frequency Environment

All fixed transmitters in the vicinity of the launch pad and landing runway with a measured peak field strength of more than one V/m are included in the EMCFA computer analysis. Mobile, airborne, and shipboard transmitters are not included in the analysis. Although there are numerous variables and uncertainties associated with international airspace and waters, the potential threat from these uncontrollable mobile transmitters is small, considering the low probability of close approaches to the launch site and the attenuation provided by the orbiter.

13.2.3 Data Processing and Review

The EMCFA program conducts a worst-case analysis. Calculated interferences are tabulated and plotted if the interferences are within the 60-dB passband of any receiver and down to 30 dB below maximum sensitivity. The raw printout has to be analyzed to discard impossible signal combinations and duplications. The remainder with some potential RF interference (RFI) are recalculated manually and analyzed in greater detail.

13.2.4 Interpayload Field Strength Exposure Matrix

Payload transmitter field strengths are predicted at different orbiter and payload locations and are assessed to preclude overexposure of the orbiter and payloads. Payloads and orbiter payload bay avionics are considered vulnerable regardless of their activation status. Worst-case line-of-sight field strengths are calculated, and non-problems are culled by inspection. A detailed EMI prediction can be performed on the rest. If incompatibilities are identified, discrepancy notices (DN's) are submitted to the Cargo Integration Review Engineering Board to initiate corrective actions.

13.2.5 Payload Ground Radiation Constraints

Customers should inform the SSP of payload RF susceptibility if it could be detrimental to the orbiter, crew, or other payloads. The required customer-provided information is outlined in NSTS 21288.

13.2.6 Launch Complex Combined Magnetic Field Survey

Payloads containing ultrasensitive magnetic devices may incur calibration shifts when exposed to the combined Space Shuttle and launch complex residual magnetism and the local geomagnetic field for many days at the launch site. If a magnetic survey is necessary at a launch site to determine the combined magnetic triad, the requirement should be specified in the PIP and Launch Site Support Plan, PIP Annex 8. details should be addressed with the launch site support manager.

13.2.7 Payload Hazard Report Reviews for Safety

All payload hazard reports involving EMC issues are reviewed for disposition. EMC issues include the following:

a. Intentional or inadvertent payload transmitter emissions in the payload bay that constitute critical or catastrophic hazards; transmitter inhibits to preclude turn-on are reviewed for adequacy.

b. EED (pyrotechnic initiator) types and usage.

c. EED sensitivity levels to electrostatic discharges (ESD's) resulting in premature firings that constitute catastrophic hazards.

d. EED sensitivity levels to non-ionizing radiation that constitute catastrophic hazards.

e. Lightning protection to avoid catastrophic hazards, per Lightning Protection Criteria Document, NSTS 07636

f. Payload-generated ESD that triggers explosive atmospheres or ignites flammable atmospheres in the payload bay.

g. Intentional or inadvertent payload laser or laser systems radiation in the payload bay that constitutes potential hazards for flight crews (such as distraction, disruption, disorientation, and incapacitation), or presents an electrical shock, fire damage hazard to the orbiter.

Safety policy and requirements are stated in NSTS 1700.7B, and implementation procedures in Payload Safety Review and Data Submittal Requirements, NSTS/ISS 13830.

13.3 Payload Electromagnetic Compatibility Test Reports

EMC testing formally demonstrates EMC compliance with payload ICD requirements. Payloads must be compatible with the Shuttle-produced EMI environment and must not generate conducted and radiated emissions exceeding cargo-allowed EMI environment limits. Although conducted emissions testing isn't normally required for cabin payloads with self-contained power supplies, customers should perform this testing if the crew might need to connect the payload to orbiter facility power due to a power-related problem (e.g., drained batteries or other reasons).

13.3.1 Waivers

If a payload exhibits EMC noncompliances, the customer may request a waiver to the requirements if the conditions impose no threat to the orbiter or other payloads, Desirable safety margins required for issuing a waiver are 6 dB for conducted emissions, 12 dB for radiated emissions, and 20 dB for ordnance as compared to sensitivity levels of potential victims in other payloads and Space Shuttle avionics.

13.4 Electrostatic Discharge

ESD involves differential charging among cargo elements and the orbiter. Differential charging occurs when different elements are charged to different negative potentials. The primary charging mechanism of concern is triboelectrification, or charging caused by materials with different dielectric constants rubbing or sliding in contact and then parting. Charging is also caused by liquid flow through piping, commencing at one m/sec. High-velocity air flow on a surface, where the air has a heavy concentration of particulates, is another triboelectrification process. Particulates may be dust and hydrometeors such as rain, snow, hail, sleet, or fog. Charging commences at flows greater than 5 m/sec (assuming mass flow rates at standard conditions) and is greatly affected by humidity.

The voltage required to break down air is a function of pressure and distance between elements with a minimum of 350 V at 170,000 feet, as described by the air Paschen curve. At 340,000 feet and above, where the pressure is below 0.0001 torr, breakdown voltage is independent of residual gas pressure. It depends on surface shape and materials as well as distance between elements. The breakdown voltage of the air mixture at low Earth orbit (LEO) between cargo/orbiter elements is over 100,000 V/cm. Therefore, arching in non-enclosed volumes at LEO is not a threat.

The major ESD concern for the orbiter is triggering an explosion of hydrogen gas that might inadvertently leak into the payload bay during launch, return to launch site (RTLS), abort once around (AOA), or normal landing from residuals in the aft equipment bay plumbing. Hydrogen leakage into an enclosure of air at one atmosphere is typically triggered by an arc of 200 microjoules (μJ). An ideal mixture could trigger at 17 μJ. Stoichometric mixtures of pure hydrogen and pure oxygen could be triggered by an arc of 1.2 μJ energy at one atmosphere.

13.4.1 Static Bonding

NSTS 37330, Bonding, Electrical, and Lighting Specifications, requires structure resistance to ground of less than 1Ω for static charging prevention (class S).

Class S bonding in NSTS 37330 refers to all isolated conducting items (except antennas) that have any linear dimension greater than three inches; are subject to frictional charging (triboelectrification) by a credible charging mechanism, carry fluids in motion at rates greater than one m/sec, or are external to the vehicle and not in a sealed enclosure.

The linear dimension rule of three inches in NSTS 37330 is somewhat misleading. Surface area and shape is a more accurate concept (sharp points and edges versus rounded surfaces). The minimum surface area of concern, hence its capacitance, is a variable depending on the interaction between two rubbing, sliding, or touching and parting surfaces plus the following parameters for materials:

a. Conductivity

b. Dielectric constants

c. Insulator material thicknesses

d. Environmental (gas) temperature, pressure, and humidity

e. Energy required to generate an arc discharge capable of triggering an explosion or starting a fire if the environmental gas is flammable or explosive

The static charge bleed resistors on the isolated RMS grapple fixture, installed on deployable payloads, are two 10,000 Ω resistors in parallel, or 5000 Ω to orbiter's RMS end-effector structure. The relaxation time, (the time to drain the charge differential between the RMS and payload) is five resistance times capacitance (RC) time constants

τ = Rg x C
or 99.3 percent of the charge.

Example: Payload capacitance (C) is 1000 picofarads (pf). Resistance to structure ground (Rg) is 5000 Ω.

τ= 5 (Rg x C)
= 5 (5000 Ω x (1000 x 10^{-12}) farads)
= 25 microseconds

If the voltage differential (V) is 4000 V, the stored energy would be

E = 1/2 (CV^2)
= 1.2 ((1000 x 10^{-12}) farads x 4000^2 V)
= 0.008 joules.

13.4.2 Arc Discharges Triggering Explosive Gases

In an explosive gas environment, at one atmosphere, the chances of explosion exist due to an arc discharge if the following conditions are present:

- Arc energy (joules) exceeds the trigger threshold for that gas mixture
- Charged conductor (single) RC time constant is greater than one millisecond, allowing for significant charge buildup

Ground capacitance of typical objects:

Low:	needle point	1 pf
	hand tool	10 pf
	human	150 to 250 pf
High:	auto	500 pf
	isolated railroad tank car	1000 pf

Structural capacitance above 1000 pf is rare. Exceptions are capacitors and thermal blankets.

More energetic arc discharges can occur if an object's capacitance is large, but more charge is required to build high voltages.

A discharge derived from a charged conductor produces a more serious hazard in a flammable or explosive atmosphere than one derived from a charged insulator, the charging in coulombs being equal. A single spark from a conductor generally discharges most of the total charge.

13.4.3 Thermal Blankets

The following should be used for thermal blankets:

All metallized surfaces in multilayer insulation (MLI) blankets shall be electrically grounded to structure. Metallized multilayer surfaces should be electrically grounded to each other by ground tabs at the blanket edges. Each tab should be made from a 2.5-cm-wide strip of 0.005-cm-thick aluminum foil. The strip should be accordion folded and interleaved between the blanket layers to give a 2.5- by 2.5-cm contact area with all metallized surfaces and the blanket front and back surfaces.

Redundant grounding tabs on all blankets are required as a minimum. Tabs should be located on blanket edges and spaced to minimize the maximum distance from any point on the blanket to the nearest tab. Extra tabs may be needed on

odd-shaped blankets to meet one additional condition: any point on a blanket should be within one meter of a ground tab.

The following practices should be observed during blanket design, fabrication, handling, installation, and inspection:

a. Verify layer-to-layer blanket grounding during fabrication.

b. After installation, verify that there is less than 10 Ω dc resistance between blanket and structure.

c. Close blanket edges (cover, fold in, or tape) to prevent direct irradiation of inner layers.

d. Do not use crinkled, wrinkled, or creased metallized film material.

e. Handle blankets carefully to avoid creasing of the film or degrading the ground tabs.

f. If the blanket exterior is conductive (paint, indium tin oxide) make sure it contacts the ground tab.

13.4.4 Purge Air

Prelaunch purge air is filtered to high efficiency particulate air (HEPA) class 5000. During entry and descent, atmospheric air is filtered through 35-micron filters. Charging effects of clean air impinging on spacecraft surface are minimal.

13.4.5 Articulating Joints

Static bonding across threaded bolts is unreliable and unacceptable. If structure must be grounded across an articulating joint or hinge, a ground strap as short as possible shall carry the ground across the joint. Reliance on bearings as a ground is unacceptable.

13.4.6 Temporary Structures

Erectable type structures assembled on orbit for temporary use have less stringent bonding requirements than permanent structures. The dc impedance of disassembled components to structure when stowed in a grounded enclosure is the primary concern during launch and landing. Specific bonding requirements should be negotiated with the SSP.

13.4.7 Beta Cloth

When the outermost layer of thermal blanket is made of beta cloth for protection against solar ultraviolet emissions and for abrasion, a vacuum deposited aluminum (VDA) backlayer or conductive wire grid woven into the fabric is usually unnecessary. Exceptions are when payloads carry dangerous liquid fuels or there is a credible charging mechanism to the beta cloth surface. Specific designs should be negotiated with the SSP.

13.5 Lighting

Payloads are provided direct lightning strike protection by enclosing orbiter structure. However, payloads are potentially exposed to lightning-induced transients from a nearby or direct lightning strike to the orbiter. The lightning-induced transients may damage or upset payload electrical/electronic equipment without deliberate lightning protection. The exposure is reduced significantly by lightning protection features of the orbiter, and operational restrictions implemented to avoid being struck by lightning. The orbiter is protected on the launch pad by a catenary wire system which prevents direct attachment of lightning to the vehicle. The launch commit criteria are designed to avoid launch in atmospheric conditions favorable to lightning conditions. Landing criteria tend to minimize landing in inclement weather conditions (such as high turbulence and precipitation) which may accompany lightning. As such, the exposure of payloads to lightning effects is considered possible but remote. As a reference protection guide, only orbiter CRIT 1 electrical/electronic equipment are designed and protected against lightning-induced transients. The defined lightning environment and methodology to be used for lightning protection design and assessment is given in NSTS 07636, Lightning Protection, Test and Analysis Requirements.

13.6 Electromagnetic Compatibility Provisions

13.6.1 Bridge and Trunnion Latches

The sill trunnion latch fibriloid liners provide up to one megohm (MΩ) of isolation between the payload trunnion and latch.

13.6.2 Keel Latch

Keel latches have a fibriloid liner providing up to one MΩ of isolation. At the request of the payload contractor, two beryllium-copper tabs (fingers) may be installed in the keel latch to provide a static ground (one ohm) for the payload. This provision may be required for retrievable payloads, and must be incorporated in the payload-unique ICD.

13.6.3 Adaptive Payload Carrier

Adaptive payload carriers (APC's) are aluminum mounting plates installed on the sides of the payload bay near the sill longeron. APC's are used for installing small payloads in the payload bay. A ground wire in the 28-V dc power cable provides a fault ground for payload mounted on APC's; however, the ground wire does not provide a sufficiently low impedance path to ground for RF energy as required by NSTS 37330.

The SSP will furnish an RF jumper to bond the payload mounting plate to the APC with less than 1.25 mΩ resistance. The APC-to-structure bond resistance will also be less than 1.25 mΩ. This gives the payload a low impedance RF bond path with a resistance of less than 2.5 mΩ to orbiter structure.

The payload contractor is responsible for bonding the equipment mounted on the payload mounting plate in accordance with NSTS 37330.

13.6.4 Standard Mixed Cargo Harness

The SMCH standard 200-A, 28-V dc power service for major payloads provides a 0-gauge wire for electrical bonding of the payload to orbiter structure. The 0-gauge ground wire is eight feet long on the orbiter side of the interface and an estimated 8.5 feet in length on the payload side. Since a 16.5-foot ground wire has substantial impedance at megahertz frequencies, this factor should be considered in evaluating payload RF bonds.

13.6.5 Additional Bonding Jumpers

Special RF bonding jumpers up to 30 inches long that will provide less than 2.5 mΩ of resistance at the payload/orbiter interface are available. Customers should identify the attach points for these jumpers in the unique ICD. The requirement for unique bonding jumpers should be negotiated with the SSP.

13.6.6 Special Cables

Customers requiring special cables for EMI protection should negotiate procurement of such cables with the SSP and incorporate the requirement into the payload-unique ICD.

13.6.7 Get-Away Special Electromagnetic Compatibility

The standard GAS canister protects the orbiter from GAS experiments emissions. GAS canisters are EMC certified by Goddard Space Flight Center (GSFC), but canisters with any nonstandard opening or feedthrough must be retested for EMC by GSFC.

13.6.8 Special Power Line Extensions and Filters

Some middeck payloads use cabin utility power outlets requiring special power line extensions and/or inline custom-built filter assemblies; equipment procurement for this optional service should be negotiated with the SSP and incorporated into the PIP and payload-unique ICD.

13.6.9 Electromagnetic Compatibility Testing of Middeck Payloads

Middeck payload customers who request the SSP to conduct the required EMC test series (in whole or in part) should negotiate this optional service with the SSP and incorporate the requirement into the PIP and payload-unique ICD.

13.7 Laser and Laser Systems

Space Shuttle payloads may be scanned and/or illuminated by a laser. Shuttle payloads may also utilize lasers. The guidelines below are presented to eliminate the potential for pilot and crew eye and skin damage from direct or indirect (reflection, refraction, etc.) laser beam illumination.

Payloads must be designed to limit laser illumination to below the specified Maximum Permissible Exposure (MPE) levels. Operational restrictions may be imposed to meet intended laser and laser systems safety requirements. For example, with the use of Class 3b and 4 laser/laser systems on the orbiter, the distance from any laser beam emission point to the crew compartment windows, and EVAs must be greater than the ANSI Z136.1-2000 specified Nominal Ocular Hazard Distance (NOHD). The NOHD is determined from the particular laser characteristics. If the distance requirement cannot be met, it may be necessary to restrict the lasers ability to point in directions which would either directly or indirectly illuminate the crew compartment windows and EVAs. Any such restrictions should be specified in the PIP.

The nature of the lasers and their concentrated energy can create the potential for permanent eye injury and/or skin damage to crew and mission specialists of the Shuttle Orbiter if operated closer than the Nominal Ocular Hazard Distance (NOHD). In addition, when laser emissions are projected or reflected into airspace they can be intercepted by other spacecraft, including payloads, EVAs and the International Space Station. Unplanned exposure from spectral or diffuse reflections may also cause crew distractions and/or create temporary vision impairments such as glare, flash-blindness, and afterimage beyond the NOHD. As a result, safeguards must be established to ensure that pilots and crews are not exposed to unsafe levels of laser exposure that could interfere with lift-off, landing, on on-orbit operations. Therefore, a laser safety assessment shall be conducted on all proposals for laser and/or laser systems to ensure there are no hazardous effects during launch/landing and on-orbit activities.

Considerations for Laser Assessments:

a. Does any payload contain devices that emit laser radiation? If so, are there laser emissions that exceed SSP or payload laser sensitivity levels?

b. Does the MPE at any wavelength between 180 nanometers and 1 millimeter exceed the MPE limits in ICD-2-19001?

c. Are there constraints built into the laser design to limit or prevent lateral and elevation movement of a laser platform if required?

d. Are there any diffuse/specular reflections from surfaces in the immediate area of the laser? If so, what are they and where are they located? Identify any potential hazards.

e. Evaluate the intended laser usage in the laser environment.

f. Identify the accepted fault tolerance of the laser per its classification and verify that the appropriate controls are in place for the potential hazards.

g. Identify any potential hazardous laser beam path(s) or zone(s).

h. Identify the type of laser and whether it is pulsed or continuous wave (CW).

13.7.1 Laser Maximum Permissible Exposure from Payloads

The Laser Maximum Permissible Exposure (MPE) is described in ICD-2-19001. Of particular importance is Paragraph 10.7.3.3.1 “Laser Impingement on Orbiter Crew Compartment Windows.” The following guidelines are used to review a waiver request when the MPE limits would be violated:

- If the violations in the MPE are from a laser source located above $Z_0$410 inches and whose laser beam boresight is pointing up and out of the bay without obstructions, a waiver is usually granted if devices are incorporated to preclude laser beam from intercepting the crew compartment rear windows. Examples of such devices are positive mechanical stops on the azimuth and elevation traverse, or an integrated electrical beam control system to

control with high-precision the laser pointing capability.

- If the over-limit condition is slight and the distance of the laser to Orbiter impingement in the $-Z_0$ direction, is predominantly aft of $X_0$900 inches, and it is farther than the required NOHD in the crew compartment after correction factor due to the transmittance factor of the orbiter window, then a waiver is usually granted. The transmittance factors for the Orbiter windows are given in Figures 10.7.3.3.2-1 through 10.7.3.3.2-4 of ICD-2-19001.

- Waivers are not granted if analysis or test indicate that the maximum irradiance through the cabin rear windows (windows 9 and 10, see ICD-2-19001, Figure 3.1.4.1 “Crew Compartment Window Locations”) exceed the MPE.

- Each request of waiver shall be analyzed to determine the hazards and assess the risk of the proposed waiver of a requirement, or a specified method or process. The change in the risk involved in accepting the waiver shall be identified. When the level of safety of the system will be reduced by waiver of the requirement, method, or process, technical justifications must be fully included.

Ground Systems

14

14.1 Communications

During orbital operations, the shuttle communicates with the ground either directly or through TDRSS; Figure 7-1 illustrates shuttle communication links.

14.1.1 Space Tracking and Data Network

The STDN is a worldwide system of S-band stations. Ground tracking stations provide augmented support of S-band telemetry, commanding, and voice outside the TDRS coverage zone (see Figure 14-1.) STDN sites within the TDRS coverage zone are available as required for backup to the TDRSS. The TDRSS network supports all orbital operations.

STDN sites receive and transmit on the S-band PM system and transmit to MCC-H via GSFC.

On-site STDN functions include receiving and recording of all telemetry, real-time transmission of 64- or 128-kbps real-time operational telemetry to MCC-H, and conversion of voice to analog signals for transmission to the MCC-H. Voice from the MCC-H is digitized, encrypted, and time-division-multiplexed with command data for the uplink.

Ground status data such as received signal strength and station configuration are transmitted to the MCC-H in real time.

14.1.2 Tracking and Data Relay Satellite System

The TDRSS consists of two geosynchronous operational satellites separated by 130 orbital degrees (Figure 14-1), a third on-orbit spare satellite, and a ground station at White Sands, New Mexico. The system can support two orbiters simultaneously and additional orbiting free-flying satellites in multiaccess modes. The TDRSS system provides PM interfaces to the orbiter Ku-band system and the S-Band PM system. At flight altitudes of 161 to 322 km, the TDRSS typically provides communications for 40 to 90 percent of continuous coverage compared with STDN communications contact of 7 to 30 percent of continuous coverage. TDRSS ground station data is routed via commercial satellite to ground stations located at JSC, GSFC, and MSFC (Figure 14-2).

Real-time and playback telemetry, digital voice data and real time or playback video can be transmitted to ground. TDRSS also provides for uplink commanding text and graphics.

Domestic communications satellite services are utilized for real time remoting of high-rate data streams.

Communication links between GSFC and MCC-H are used for limited STDN data transmission.

14.2 Mission Control Center-Houston

The MCC-H at JSC provides facilities for flight control and data systems monitoring and control during Space Shuttle flights. The MCC-H is supported by the STDN and TDRSS (Figure 14-3), which provide flows of telemetry, trajectory, command, video, and voice data. Three major systems within MCC-H receive, route, process, display, and control data flows. These systems are the communications interface system (CIS), the Space Shuttle data processing complex (DPC), and the display and control system (DPS). Payload data from the PDI is available in the MCC-H, however customer requirements must be identified in PIP Annex 4.

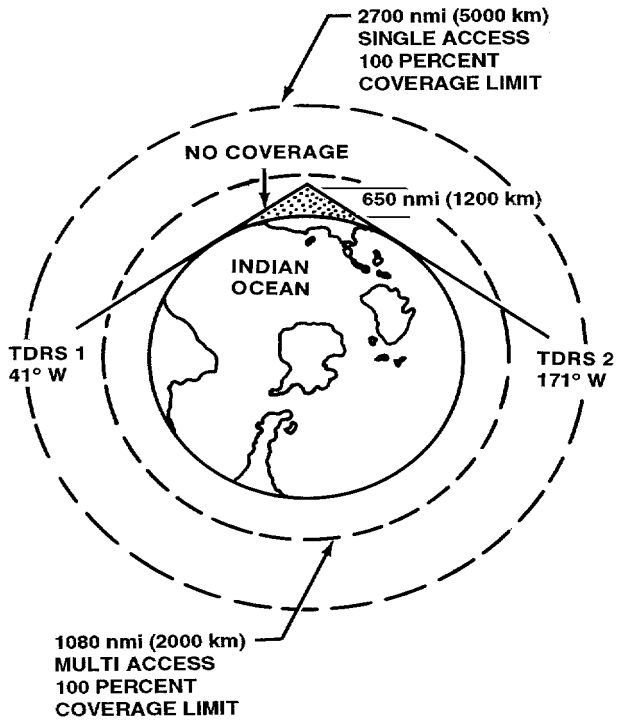

Figure 14-1.- Coverage capability of TDRSS.

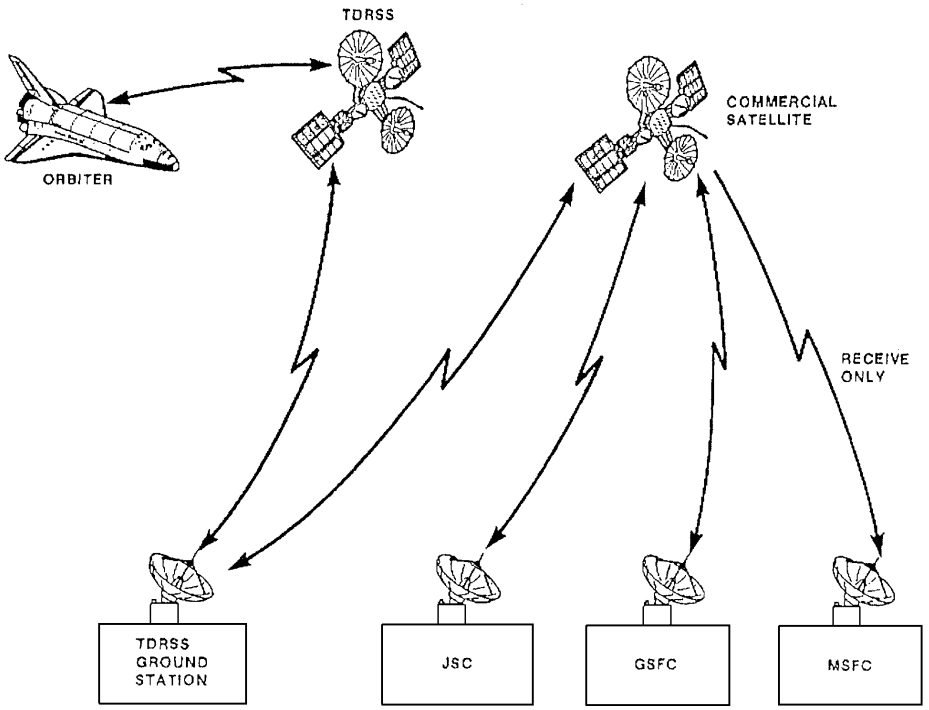

Figure 14-2.- Flow diagram of ground communications.

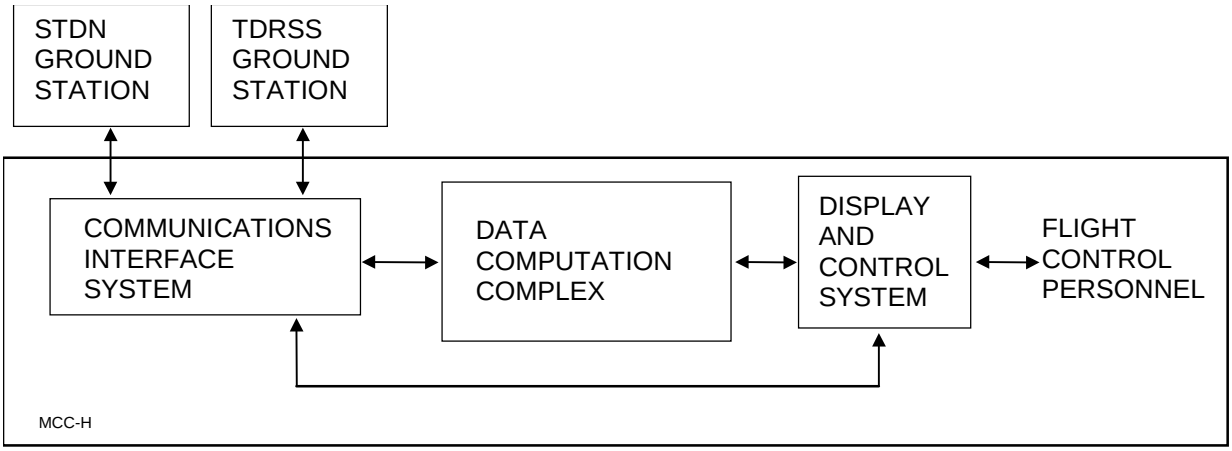

Figure 14-3.- Mission Control Center-Houston.

14.2.1 Communications Interface System

The CIS provides voice and data communications within the MCC-H, and voice, data, and video interfaces between MCC-H and external sources.

14.2.2 Data Computation Complex

The data computation complex (DCC) supports MCC-H display and control computation, peripherals, and switching functions; it also provides real time command, control, and telemetry processing.

The DCC consists of the following major hardware components:

- A multibus interface for multiple bidirectional data transfer between the DCC and elements of the CIS
- The shuttle data processing complex of switchable computer systems
- The configuration and switching equipment subsystem for receiving command requests from and sending display data to the display and control system (DCS)

14.2.3 Display and Control System

Computer-generated display data can be requested and monitored using the DCS. The DCS will detect, encode, and transmit operator requests and generate displays in response. The MCC-H television system provides reception, recording, color conversion, display, and public distribution of certain downlinked shuttle video.

14.3 Payload Operations Control Centers

There are three NASA POCC's: one at JSC, MSFC, and GSFC. The MCC-H can interface with customer-provided remote POCC's.

14.3.1 Telemetry

Payload data interleaved in the orbiter operational telemetry downlink is routed to the MCC-H which processes the data, extracts the payload data, formats it for output, and transmits it along with standard base orbiter data to the remote POCC's. Ephemeris data, command acceptance pattern data, and ground-systems data can be transmitted through long lines to remote POCC's with telemetry data.

Some payloads may, if compatible, transmit directly to TDRSS. These data streams are routed directly from the TDRSS ground site to the appropriate remote POCC.

14.3.2 Commands

When payloads are attached to the orbiter or operating detached from the orbiter through the PI link, commands from remote POCC's are routed to the MCC-H for verification, conversion into orbiter command format, and uplinking to the payload

through the orbiter systems. The MCC-H will provide a nearly transparent path through the orbiter to the payload but will maintain control over potentially hazardous commands. The MCC-H will perform message-error checks and provide command verifications to POCC's.

14.3.3 Remote Payload Operation Control Center Interfaces

POCC Capabilities Document Payload Support Capabilities Description; MCC, JSC POCC, Remote POCC Interface, NSTS 21063-POC-CAP, describes the customer mission operations support and interface capabilities in the MCC-H, JSC POCC, and customer remote POCC.

Payload Safety

15

15.1 Requirements

The customer is responsible for ensuring that the payload and its GSE are safe. Flight and Ground Phase III Safety Reviews must be completed 30 days prior to payload and GSE delivery to KSC. All customer-provided hardware and GSE shall be designed and operated to comply with the requirements of NSTS 1700.7B, “Safety Policy and Requirements for Payloads Using the Space Transportation System” and KHB 1700.7B/45 SPW HB S-100, “Space Transportation System Payload Ground Safety Handbook.” Safety reviews will be conducted in accordance with NSTS/ISS 13830, “Payload Safety Review and Data Submittal Requirements for Payloads Using the Space Transportation System and International Space Station.” Prior to customer initiation into Payload Safety Review Panel (PSRP) activity, the SSP may provide an initial contact safety briefing to the customer. This request should be coordinated between the PSRP Executive Secretary and appropriate Payload Integration Manager.

15.1.1 Fault Tolerance

Payloads utilizing Orbiter services to control a hazard must recognize the inherent failure modes and fault tolerance as described in NSTS 16979, Shuttle Orbiter Failure Modes and Effects Associated with Standard Cargo Interfaces, and only use those services in a manner which provide the required independence if Orbiter services redundancy is required.

Hazards associated with the interactions among mixed payloads, and between payloads and the Space Shuttle is the responsibility of Space Shuttle Program. These hazards are documented through the Generic Integrated Cargo Hazard Assessment NSTS 21111 process. The mission-specific hazards are controlled by established group responsibilities through the certification of flight readiness (CoFR) process documented in NSTS 07700, Vol. XIV, Payload Accommodations.

Prime safety considerations utilizing integrated circuit design for control hazard must apply the NSTS 1700.7B requirements across the complete end-to-end design. Those controls need to provide adequate fault tolerance. For payloads using Orbiter services to provide hazard control, the payload avionics system (including the Orbiter service) must include design considerations, which provide independence of controls. This independence ensures that no common cause credible failure can remove more that one control.

For Integrated hazards, each supporting control circuit must be well understood in terms of functional need to support safety. Some hazards are related to a “Must Work” function while others are related to preventing premature activity from occurring. The functional safety need of the proposed hazard control method must have verifiable independence.

15.1.2 Payload Safety Process

To provide required integration data, the payload is required to generate specific documentation aimed at supporting the payload safety requirements. The payload is required to identify all potential payload hazards and report on them during the phase safety reviews. Whenever a branch of the controls of the hazard are partially obtained from the Orbiter services, additional information must be provided in both the safety data package and in the NSTS 07700 program documentation.

Safety Critical End-to-End Safety Critical Schematics

The payload must provide unique drawings which match the words provided in the hazard report, identifying each of the active safety critical components (both Orbiter and payload) and the specific Orbiter interface. This drawing has to be

developed as the hazard control rational is developed. Its interfaces must agree with and be attached to the appropriate hazard report. The drawing must be provided and maintained as part of the payload provided “As Built” End-to-End Electromechanical safety critical drawings as specified in the PIP Annex 1.

Hazard Event Table

Additionally, the payload must create and maintain hazard events tables. These tables identify each of the safety critical interfaces related to the hazard. These tables must also be maintained to remain consistent with the End-to-End Electromechanical schematics and also attached to the individual hazard reports. These tables must be accumulated and formatted consistent with NSTS 07700 Vol. XIV, Section 13 Hazard Events Table, and provided in the payload-unique ICD.

15.1.3 General Electrical Systems Requirements

Electrical power distribution circuitry shall be designed to include circuit protection devices to protect against circuit damage normally associated with an electrical fault when such a fault could result in damage to the Orbiter or present a hazard to the crew by direct or propagated effects. The payload is provided with an option which requires them to prove that they have created postmate functional verifications demonstrating that no shorts between any adjacent connector pins (both Orbiter and payload) or from pins to connector shell do not exist.

If a payload can demonstrate that such a test can be created and preformed, then bent pins will be considered non credible. If a conclusive verification test cannot be created, then the payload is provided with an option to create a design which will assure that any pin if bent prior to or during connector (Orbiter and/or payload) mating cannot invalidate more than one hazard inhibiting feature.

Traditionally payloads can not base their design on these type safety requirements, payloads elect to:

1. Minimize the circuits running through their connectors to those which are functionally used therefor all pins within those connectors are verifiable during a Postmate testing.

2. The Orbiter performs a bent pin analysis utilizing the payload provided ICD Hazard Events Table. The analysis identifies testing requirements for adjacent unused circuits to eliminate credible bent pin safety concerns within the Orbiter.

3. The payload provides a pin selection design configuration of the last payload to Orbiter interface connector such that required independent circuits are separated such that a single bent pin would not invalidate both hazard controls

15.1.4 Safety Critical Power

The power circuits and sources fall into two major areas of concern to safety, those which provide the capability to perform a the task which otherwise would create a hazard, and those electrical circuits and sources which provide energy to activate the safety control devices and safety monitors.

Relative to cargo Integration, safety aspects of the integrated design can be assured to be controlled if standard interfaces are used. When Space Shuttle Program services are to be utilized to control payload hazards, the integrated system must meet the failure tolerance and redundancy requirements. Normally each Orbiter services can be considered independent from another. However, certain services have common cause failures precluding their use as redundant functions. Some services have been extensively evaluated and may be considered as equivalent to single fault tolerant if specific conditions are met.

15.1.5 Conditional Single Fault Tolerant services

GPC Data Bus Couplers

Orbiter provided services such as the redundant data bus couplers (ref para. 8.2.12) will affect the Orbiter capability of controlling the payload bay doors. These redundant services are provided on the port and starboard sides of the Orbiter. If the payload elects to use these services and not keep them independent, a failure of one system may adversely affect the other requiring an EVA be

preformed to close the doors. Payloads using these services must maintain independence and document these services in the payload unique ICD section 13 Hazard Events table and with proper application the two buses are single fault tolerant.

Audio Central Control Network (ACCN)

Orbiter provides manned payloads with access to the Orbiter redundant Audio Central Control Network Interfaces which can provide communications, paging, and aural caution and warning. These services are critical in the ability of the Orbiter to communicate in both the air to air and air to ground environments. Since these services are critical and instrumental in providing control for numerous hazards, these redundant services must remain independent.

15.1.6 Orbiter Services Fault Tolerant

NSTS 16979 is dedicated to documenting failure modes and fault tolerances for interface services. These analyses and certification require that very specific criteria be followed. These exceptions allow specific services to be used and considered as being equivalent to either single fault tolerance or in some combinations equivalent to two fault tolerant.

0 AWG Feeder

Under very specific conditions a single Orbiter 0 gage may provide the equivalence of single fault tolerance power supply for payload “Must Work” type hazards. Before attempting to use this service as single fault tolerance the payload must agree to all of the conditions documented in the O gage portion of section 4 of NSTS 16979.

Auxiliary (AUX) Power Feeder

Also, under very specific conditions the two Aux. gage services may be considered single fault tolerant.

Aft DC Buses

Restricted to being considered 0 fault tolerant.

Cabin Payload Buses

Restricted to being considered 0 fault tolerant.

AC Buses

Restricted to being considered 0 fault tolerant.

T-0 Wire Pairs

Each wire pair is independent of all other pairs. The wires contained within a pair can only be considered as providing zero fault tolerance.

Standard Switch Panel (SSP) Switches

Under very specific conditions a single SSP switch may provide through it multiple contacts the equivalence of single fault tolerance “must work” capability. This capability is not available if independent power is not available and can not be applied to multiple inhibits. Also, the payload can not rely on EVA for a third leg of the hazard control.

<u>Deployment Pointing Panel (DPP)</u>
The payload design must provide for a ground return inhibit. The select, arm and deploy switches are all considered equivalent to providing single fault tolerant redundancy services if cabled up to appropriately.

Flight Deck Safing Switches

All safing switches are independent. Like other Orbiter-type, multipole toggle switches, a single switch can be considered as providing an equivalent of single fault tolerance “Must Work” applications if the appropriate design features required in NSTS 16979 are met and specific testing and the exclusion of an EVA control is provided.

Payload Retention/Latch Assembly System (A6A1)

Payloads utilizing the AC Payload Retention/Latch Assembly system must evaluate the complete circuitry carefully. Individual latch/release switches are independent of each other if the redundant feature of System 1 and System 2 are maintained. The payload must provide another level of protection such that the failure of these redundant Orbiter services does not result in an immediate hazard. Where this system is a portion of the payloads two fault tolerance system, the payload must provide design features to demonstrate the end-to-end performance of all paths of the electrical and mechanical functions

prior to exposure to a potentially hazardous condition.

Payload Signal Processor (PSP)

Circuits of PSP #1 or PSP #2 are considered zero fault tolerant however circuits of PSP #1 and PSP #2 will provide single fault tolerance.

MDM DOH
All combination of DOH's of PF1 circuits must be consider zero fault tolerant and likewise all circuits of DOH's of PF2 must be considered zero fault tolerant however in combination they are independent and can provide for single fault tolerance.

MDM DOL
All combination of DOL's of PF1 circuits must be consider zero fault tolerant and likewise all circuits of DOL's of PF2 must be considered zero fault tolerant however in combination they are independent and can provide for single fault tolerance.

MDM SIO
All combination of SIO's of PF1 circuits must be consider zero fault tolerant and likewise all circuits of SIO's of PF2 must be considered zero fault tolerant however in combination they are independent and can provide for single fault tolerance.

15.1.7 Verification of Hazard Controls

As the payload is integrated into the Shuttle, as a minimum, payloads must provide verification as identified in NSTS 14046 to maintain personnel safety, Orbiter integrity and safe use of flight and ground systems.

15.1.8 Smart Shorts of Power Lines

The SSP requires customers to analyze power distribution systems for the impact of a failure that is smart enough to stress the current limiter (fuses, circuit breakers, resistors) to the maximum possible current level prior to trip. (This phenomenon is called a smart short.) For the combined load analysis that assesses the impact of an equivalent smart combined load. The customer should assume that the power line under analysis provides nominal loads to all load paths except for the largest fuse/current limiter and is sustaining a smart short. Each power line or distribution segment must be safe under this smart combined load as well as a smart short.

15.1.9 Wire Protection Criteria

Payload electrical power distribution circuitry shall be designed such that electrical faults will neither damage Orbiter wiring nor present a hazard to the Orbiter or crew. Circuit protection devices and wire sizes shall be selected in accordance with NSTS 18798, letter TA-92-038, and incorporated into the payload design in each of the following cases:

a. When Orbiter wiring is to be energized from a payload power bus

b. When payload power distribution wiring is located within a crew habitable volume

c. When payload redundant safety critical power has been derived from a single approved Orbiter source

d. When energized payload power distribution circuits are routed through wire bundles containing circuits which, if any were energized, would potentially bypass or remove more than one inhibit to a hazardous function

Case b. above does not apply to power distribution circuitry inside payload electronics boxes; all other cases apply.

15.1.10 Inadvertent Release of Fluids

As a minimum, payloads must provide additional data if a payload fluid containment system fails to meet the established safety requirements. An integrated evaluation has to be preformed if an inadvertent payload vent/leak is credible. Flammability and cargo bay over-pressurization must be evaluated after the payload has exhausted his ability to meet the no venting allowed during ascent and return requirements meant for even those contingency cases where credible failure were required for the event to occur.

Acronyms and Abbreviations

16

A	ampere(s)
ac	alternating current
ACCN	Audio Central Control Network
ACT	actuator
AFD	aft flight deck
AID	Analog Input Differential
AOA	Abort-Once-Around
APC	adaptive payload carrier
APCU	Assembly Power Converter Unit
AUX	auxiliary
AWG	American Wire Gauge
BFS	backup flight system
C	capacitance
CB*n*	Circuit Breaker *n*
CCTV	closed circuit television
CIP	Computer Interface Panel
CIS	communication interface system
CITE	cargo interface test equipment
cm	centimeter(s)
CRT	cathode ray tube
CW	continuous wave
C&W or C/W	caution and warning
CWEA	caution and warning electronics assembly
dB	decibel(s)
dBμA	decibel(s) above a microampere
dBμV	decibel(s) above a microvolt
dc	direct current
DCC	data computation complex
DCS	display and control system
DEU	display electronic unit
DFL	decommutation format load
DIH	Discrete Input High
DIL	Discrete Input Low
DN	Discrepancy Notice
DOH	Discrete Output High
DOL	Discrete Output Low
DPC	data processing complex
DPP	deployment pointing panel
DPS	Data Processing Subsystem
DSN	Deep Space Network
DU	display unit
E	potential difference, energy
EED	electro-explosive device
EMC	electromagnetic compatibility
EMCFA	electromagnetic compatibility frequency analysis
EMI	electromagnetic interference
EPDS	electrical power distribution system
ESD	electrostatic discharge
EVA	extravehicular activity
F*n*	fuse *n*
FDA	fault detection and annunciation
FM	frequency modulated, frequency modulation
GAS	Get-Away Special
GHz	gigahertz
G.m.t.	Greenwich Mean Time
GNC	guidance navigation and control
GPC	general purpose computer
GSE	ground support equipment
GSFC	Goddard Space Flight Center
GTOD	Greenwich true-of-date
h	hour angle
HEPA	high efficiency particulate air
HO	medium strength ($6V < E \leq 40V$) signal
Hz	hertz
ICC	intercomputer communication channel
ICD	Interface Control Document
IDD	Interface Definition Document
IDP	Integrated Display Processor
IF	Intermediate Frequency
I/O	input/output
IOM	input/output module
ips	inches per second
IR	infrared
IRIG-B	Interrange Instrumentation Group B

JSC	Lyndon B. Johnson Space Center
kbps	kilobit(s) per second
keV	kilo electron volt(s)
kHz	kilohertz
km	kilometer(s)
KSC	John F. Kennedy Space Center
KUSP	Ku-band signal processor
kW	kilowatt(s)
kWh	kilowatthour(s)
L-	launch minus
lb	pound(s)
LDB	launch data bus
LEO	low Earth orbit
m	meter
m/sec	meter(s) per second
M50	Aries Mean of 1950
mA	milliamperes
MAR	Middeck Accommodations Rack
MAX	maximum
Mbps	megabits per second
MCC-H	Mission Control Center-Houston
MCDS	Multifunction CRT Display System
MDA	Main dc Distribution Assembly
MDM	multiplexer/demultiplexer
MET	Mission Elapsed Time
MHz	megahertz
MIA	multiplexer interface adaptor
Min	minimum
μJ	microjoules
ML	low strength (100 mV < E ≤ 6V) signal
MLI	multilayer insulation
MMU	mass memory unit or Modular Memory Unit
MN	main
MN *x*	main power bus *x*
MPC	manual pointing controller
MPCA	Midbody Power Controller Assembly
MPE	Maximum Permissible Exposure
MPS	Main Propulsion System
MSDP	mission station distribution panel
MSFC	George C. Marshall Space Flight Center
MTU	master timing unit
MUP	Middeck Utility Panel
MΩ	megaohm(s)
mΩ	milliohm(s)
NASA	National Aeronautics and Space Administration
NMI	nautical mile(s)
No.	number
NOHD	Nominal Ocular Hazard Distance
NORM	normal
NRZ	nonreturn-to-zero
NRZ-L	nonreturn-to-zero-level
NRZ-M	nonreturn-to-zero-mark
NRZ-S	nonreturn-to-zero-space
NSP	network signal processor
OCA	Orbiter Communications Adapter
OD	Orbiter Downlink
Ohms	
OIU	Orbiter Interface Unit
OMS	Orbital Maneuvering System
OOSDP	on-orbit station distribution panel
OP	operational
ORB	Orbiter
O&C	Operations and Checkout
P*n*	cable connector *n*
PASS	primary avionics software system
PAT	power accommodation terminal
PCM	pulse code modulation
PCMMU	pulse code modulation master unit
PCS	Portable Computer System
PDI	payload data interleaver
PDIP	Payload Data Interface Panel
PDP	Plasma Diagnostics Package
pF	picofarad(s)
PF*nn*	Payload Forward MDM *nn*
PGSC	Payload and General Support Computer
PI	payload interrogator
PIM	Payload Integration Manager
PIP	Payload Integration Plan
PL	payload
PL*n*	payload data bus *n*
PM	phase modulation
POCC	payload operations control center
PPSU	Payload Power Switching Unit
PRESS	pressure
PRI	primary
PROM	programmable read-only memory
PSDP	payload station distribution panel
PSRP	Payload Safety Review Panel
PSK	phase shift key(ed)
PSP	payload signal processor
PWR	power
PYRO	pyrotechnic
QUAD	quadrant

QPSK	quadrature phase shift keyed
RA	radar-altimeter
RAM	random access memory
RC	resistance times capacitance
RCDR	recorder
RCS	reaction control system
RCVR	receiver
REAC	reaction
REF	reference
Rep	reproduce
RF	radio frequency
RFI	Radio Frequency Interference
Rg	resistance to structure ground
RGA	Rate Gyro Assembly
RHC	Rotation Hand Controller
RMS	remote manipulator system
ROEU	remotely operated electrical umbilical
RPC	Remote Power Control
RTLS	Return to Launch Site
RTN	return
S*n*	Switch *n*
SEC	secondary
SESC	Space Environment Services Center
SIO	serial input/output
SM	systems management
SMCH	standard mixed cargo harness
SPASP	Small Payload Accommodations Switch Panel
SPAT	small payload accommodations terminal
SPC	Stored Program Command
SPDU	Station Power Distribution Unit
SSP	Space Shuttle Program Standard Switch Panel
STBD	starboard
STD	standard
STDN	Spaceflight Tracking and Data Network
SURS	Shuttle Umbilical Retraction System
SYS	system
TACAN	Tactical Air Command and Navigation System
TDM	Time Division Multiplexed
TDRS	Tracking and Data Relay Satellite
TDRSS	Tracking and Data Relay Satellite System
TEC	Time Executed Command
TEMP	temperature
TFL	telemetry format load
TLM	telemetry
TP	twisted pair
TSP	twisted shielded pair
TV	television
TVC	Thrust Vector Control
UHF	ultrahigh frequency
UTC	Universal Time, Coordinated
V	volt(s), voltage
V/cm	volt(s) per centimeter
V/m	volt(s) per meter
VA	volt-ampere(s)
Vac	volt(s) alternating current
VCR	video cassette recorder
VDA	Vacuum Deposited Aluminum
Vdc	volt(s) direct current
Vol.	Volume
VPU	Video Processing Unit
VSU	video switching unit
VU/G9	Vehicle Utilities/GNC Operational Sequence 9
W	watt
W	west
WCCS	Wireless Crew Communicator System
WIB	Wireless Video System Interface Box
WVS	Wireless Video System
XMTR	transmitter
XPNDR	transponder

Glossary

17

Afterimage:
The perception of light, dark, colored spots after exposure to bright light may be distracting or disruptive. Afterimage may persist for several minutes.

Attached payload:
Payload which remains in the payload bay and is not deployed on orbit.

Bond (noun):
Any fixed union between two objects resulting in electrical conductivity between them.

Bonding:
The process of connecting metal parts to make low-resistance electrical contact.

Bonding jumpers:
Braided wire or metal straps providing necessary electrical conductivity between a unit and structure which do not otherwise have sufficient electrical contact.

Cargo:
The total complement of payloads on a flight; cargo includes everything contained in the payload bay plus equipment, hardware, and consumables located elsewhere in the orbiter which are unique to the user.

Command services:
Command services include onboard discrete and POCC serial digital commands .

Conducted emission:
Electromagnetic emission propagated along a power or signal conductor.

Conducted Interference:
Undesired electromagnetic energy propagated along a conductor.

Conducted susceptibility:
A measure of interference signal current or voltage on power, control, and signal leads required to cause undesirable response or degraded performance.

Continuous Wave (CW) laser:
Output of a laser, which is operated in a continuous rather than a pulsed mode. In this standard, a laser operating with a continuous output for a period of >o.25 s is regarded as a CW laser.

Deep Space Network:
Communications network managed by Jet Propulsion Laboratory for command and control of all planetary flights.

Degradation:
Any out-of-tolerance condition that occurs during EMC testing

Deployment:
The process of removing a payload from a stowed or berthed position in the payload bay and releasing that payload to a position free of the orbiter.

Detached payload:
A payload which is separated from the payload bay on orbit.

Electromagnetic compatibility (EMC):
The condition when telecommunications equipment is collectively performs its designed functions in a common environment without unacceptable degradation from electromagnetic interference by other equipment or systems in the same environment.

Electromagnetic environment:
The power and time distribution, in various frequency ranges, of radiated or conducted electromagetic emissions encountered by equipment systems, or subsystem; it can also be expressed in terms of field strength.

Electromagnetic Interference:
Electromagnetic energy which interrupts,

obstructs, degrades, or limits effective performance of telecommunications equipment.

Electromagnetic interference emission:
Any conducted or radiated emission which causes electromagnetic interference.

Electromagnetic interference safety margin:
The ratio between the susceptibility threshold and interference present on a critical test point or signal line.

Electromagnetic susceptibility:
The degree to which equipment, systems, or subsystems evidence undesired responses caused by exposure to electromagnetic radiation.

Extravehicular activity:
Activities by crewmembers conducted outside the spacecraft pressure hull or within the payload bay when the payload bay doors are open.

Faying surfaces:
Flat metallic mating surfaces on connector lugs, enclosures, housings, mounts, and frames that fit closely together with other surfaces to provide low-resistance electrical bonding joints.

Fibriloid:
Teflon impregnated fiberglass

Flashblindness:
A temporary vision impairment that interferes with the ability to detect or resolve a visual target following exposure to a bright light. This is similar to the effect produced by flashbulbs, and can occur at exposure levels below those that cause eye damage. This impairment is transitory, lasting seconds to minutes depending upon the laser's light exposure level and time, the visual task, the ambient lighting, and the brightness of the visual target.

Flight:
The period from launch to landing of an orbiter. One flight might deliver more than one payload and more than one flight might be required to accomplish a single mission.

Flight manifest:
Flight designation, cargo assignment, and specific implementing instructuons for SSP operations personnel.

Flight phases:
Prelaunch, launch, on orbit, deorbit, entry, landing, and postlanding

Flight types:
Payload deployment and retrieval, on-orbit satellite servicing, and on-orbit operations with attached payloads; more than one type may be included on a flight.

Get-Away Specials (GAS's):
Small payloads mounted in a canister in the Orbiter payload bay.

Glare:
A reduction or total loss of visibility, such as that produced by an intense light source, such as oncoming headlights, in the central field of vision. These visual effects lasts only as long as the light is actually present affecting the individual's field of vision. Visible laser light can produce glare and can interfere with vision even at low energies well below those that produce eye damage.

Grapple fixture:
Structural fitting on a detached payload which mates it to the RMS end effector.

Grounding:
Electrical bonding of an equipment case, frame, or chassis to vehicle structure to ensure a common potential.

Induced environments:
Environments resulting from orbiter operation such as acceleration, vibration, acoustics, etc.

Inertial upper stage:
Solid propulsive spacecraft designed to place a payload into high Earth orbits or an escape trajectory for planetary missions.

Interface:
The mechanical, electrical, and operational common boundary between two elements of a system.

Interface verification:
Flight hardware testing of interfaces by acceptable methods to confirm their compatibility with affected elements of the Space Shuttle.

Intermodulation:
Mixing of two or more signals in a nonlinear element to produce harmonics of the input signals;

the nonlinear element(s) may be internal or external to the system, subsystem or equipment.

Invisible radiation:
Laser or collateral radiation having wavelengths of equal to or greater than 180 nm, but less than or equal to 400 nm or greater than 710 nm but less than or equal to 1.0×10^6 nm (1 millimeter).

Ku-band signal processor (KUSP):
Instrument which receives high rate scientific data from payloads and transfers it to the Orbiter communication system.

Lightning:
A sudden discharge of static electric potential that occurs naturally in the atmosphere in the presence of clouds.

Lightning surge:
A lightning-induced transient electric disturbance in an electrical or electronic circuit.

Load factors:
Percentage of orbiter weight or length capability that a payload uses.

Maximum Permissible Exposure:
The level of laser radiation to which a person may be exposed without hazardous effect or adverse biological changes in the eye of skin.

Middeck payload:
Payload or experiment requiring pressurized crew compartment accommodations.

Mission:
Performance of investigations or operations in space to achieve program goals. A single mission might require more than one flight, and more than one mission might be accomplished on a single flight.

Mission Control Center - Houston:
Central area at JSC for control and support of Space Shuttle flights.

Mission specialist:
Crewmember responsible for coordination of payload/Space Shuttle; also directs allocation of Space Shuttle and crew resources for combined payload objectives.

Mission station:
AFD location where payload support operations are performed, usually by the mission specialist.

Multiplexer/demultiplexer (MDM):
Data acquisition, distribution, and signal conditioning unit; it converts serial digital information from the GPC to analog and discrete outputs for payload operations, and acquires analog and discrete signals from the payload and converts the signals to serial digital signals for onboard processing by the orbiter GPC.

Narrowband Interference:
Undesired emission whose principal spectral energy is within the passband of a measuring receiver in use.

Natural Environments:
Extreme atmospheric and radiation environments to which payload equipment may be exposed.

Nominal Ocular Hazard Distance:
The distance along the axis of the unobstructed beam from the laser to the human eyes beyond which the irradiance is not expected to exceed the MPE.

Optional service:
Additional services and accommodations available at additional charges.

Orbiter:
The manned orbital flight vehicle of the Space Shuttle system.

Orbiter Processing Facility:
Building at KSC with two bays where orbiter postflight inspection, maintenance, and premate checkout before payload installation is performed. Payloads are installed horizontally into the orbiter in this building.

Payload:
The total complement of scientific instruments, space equipment, support hardware, and consumables carried in the orbiter (other than basic orbiter payload support) to accomplish a discrete activity in space.

Payload bay:
The unpressurized midpart of the orbiter fuselage behind the cabin aft bulkhead where most payloads are carried.

Payload carriers:
Habitable modules (e.g., Spacelab) and attached but uninhabitable modules (pallets, free-flying systems, satellites, and upper stages).

Payload data bus:
Provides compatible interface matching, isolation, and fault protection to allow the payload bus terminal unit and the orbiter GPC to operate as a digital transmission system.

Payload data interleaver (PDI):
Provides the interface for acquiring asynchronous PCM telemetry from attached and detached payloads.

Payload Integration:
The process of assembling payload and Space Shuttle components, subsystems, and system elements into a desired configuration and verifying compatibility of its elements.

Payload interrogator:
Provides communications between the orbiter and detached payloads.

Payload signal processor:
Transmits serial digital commands to a detached payload from the payload interrogator or an attached payload selected by the crew or ground station.

Payload Operations Control Center:
Central area where payload operations are monitored and controlled; customers often have direct command of a payload from a control center.

Payload recorder:
Records analog or digital data from attached payloads for limited periods of time.

Payload station:
AFD location where payload operations are performed.

Postretrieval:
The time after a payload has been returned and secured in the payload bay.

Pulsed laser:
A laser which delivers its energy in the form of a single pulse or a train of pulses. In this standard, the duration of a pulse <0.25 s.

Radiated emission:
Electromagnetic energy propagated through space; if undesired, it is called radiated interference.

Radiated interference:
Undesired electromagnetic energy radiated from a unit, antenna, cable, or interconnecting wiring.

Radiated susceptibility:
A measure of the radiated interference field required to cause equipment degradation.

Radio frequency:
Frequencies greater than 50 kHz or signal rise and/or fall times less than 10 microseconds (as defined in ICD 2-19001)

Remote manipulator system (RMS):
Mechanical arm on the payload bay longeron controlled from the AFD to deploy, retrieve, or move payloads.

Retention latches:
Longeron and keel fittings providing structural retention of payloads in the payload bay

Retrieval:
Using the remote manipulator system and/or other handling aids to return a captured payload to a stowed or berthed position.

Rise time:
The interval between instants at which amplitude rises from 10 percent to 90 percent of the peak amplitude of a pulse

Rotating service structure (RSS):
Launch pad service structure including the payload changeout room that rotates out to the orbiter on the mobile launch platform.

Shield:
A barrier that encloses or shadows a device to prevent or reduce transmission of electrical energy; a barrier can be conductive, dielectric, or have a nonmetallic absorptive core.

Solid rocket boosters:
Space Shuttle element consisting of two solid rocket motors which augment ascent thrust at launch; they separate from the orbiter soon after liftoff and are recovered and reused.

Space Flight Tracking and Data Network:
Ground station network having direct communications with NASA flight vehicles

Space Shuttle:
A vehicle consisting of an orbiter, three Space Shuttle Main Engines (SSME) external tank, and two solid rocket boosters

Standard switch panel:
Provides switch closure and/or 28-Vdc commands and status indicators for payload operation and status monitoring.

Stoichiometric mixture:
A combustible mixture having the exact proportions required for complete combustion

Tailoring:
The process of adapting the requirements of a standard to the peculiarities, characteristics, or operational requirements of the material in an individual equipment or subsystem specification.

Threshold susceptibility:
The signal level at which a test sample exhibits a minimum discernible undesirable response.

Tracking and Data Relay Satellite System (TDRSS):
A three communication system providing principal coverage from geosynchronous orbit for all Space Shuttle flights

Transient:
Single-shot impulses or pulses of low repetition rates generated by a switching action, by relay closures or other cyclic events.

Visible laser radiation (light):
Electromagnetic radiation which can be detected by human eye. This term is commonly used to describe wavelengths which lie in the range 400 to 700 nm.

Bibliography

18

I. REFERENCE DOCUMENTS

1. ICD 2-19001, Shuttle Orbiter/Cargo Standard Interfaces. This document is attachment 1 to Space Shuttle System Payload Accommodations, NSTS 07700, Volume XIV.

2. ICD 2-0A002, Space Shuttle Launch Pad and Platform

3. JSC 16719, STS OPS Flight PRD Vol II Payloads Annex 17 OSTA-3, Volume 1

4. NSTS 37330, Bonding, Electrical, and Lightning Specifications

5. MIL-E-6051, Electromagnetic Compatibility Requirements Systems

6. NSTS 1700.7B, Safety Policy and Requirements for Payloads Using the Space Transportation System

7. NSTS 07636, Lightning Protection Criteria Document

8. NSTS 07700, Volume XIV, Appendix 5, System Description and Design Data - Ground Operations

9. NSTS 08060, Space Shuttle System Pyrotechnic Specification

10. NSTS/ISS 13830, Payload Safety Review and Data Submittal Requirements

11. NSTS 14046, Payload Verification Requirements

12. NSTS 18798, Interpretations of NSTS Payload Safety Requirements

13. NSTS 21000-IDD-760XD, Shuttle/Payload Interface Definition Document for the Payload and General Support Computer (PGSC)

14. NSTS 21000-IDD-MDK, Shuttle/Payload Interface Definition Document for Middeck Accommodations

15. NSTS 21000-IDD-SML, Shuttle/Payload Interface Definition Document for Small Payload Accommodations

16. NSTS 21000-SIP-ATT, Shuttle/Payload Standard Integration Plan for Attached Payloads

17. NSTS 21000-SIP-DRP, Shuttle/Payload Standard Integration Plan for Deployable/Retrievable-type Payloads

18. NSTS 21000-SIP-SML, Shuttle/Payload Standard Integration Plan for Small Payload Accommodation

19. NSTS 21063-POC-CAP, POCC Capabilities Document Payload Support Capabilities Description: MCC, JSC POCC, Remote POCC Interface

20. PIP Annex 1, Payload Data Package Annex, Space Shuttle Integration and Operations Office, Lyndon B. Johnson Space Center, Houston, Texas (current issue). Defines the format and content of a general payload's PIP Annex 1.

21. PIP Annex 4, Command and Data Annex

22. PIP Annex 8, Launch Site Support Plan

23. SL-E-0002, Electromagnetic Interference Characteristics, Requirements for Equipment, Customizes Electromagnetic Interference Characteristics, Requirements for Equipment, MIL-STD-461, for use with the Space Shuttle.

24. Assembly Power Converter Unit (APCU) Interface Control Document (ICD), ICD-A-21321

25. NSTS 16979, Shuttle Orbiter Failure Modes and Effects Associated with Standard Cargo Interfaces

26. NSTS 21111, Generic Integrated Cargo Hazard Assessment

27. NSTS 07700, Vol. XIV, Space Shuttle System Payload Accommodations

28. NSTS 07700, Vol. IV, Configuration Management Requirements

29. MIL-STD-1553

30. ANSI Z136.1-2000, American National Standard for Safe Use of Lasers

31. ANSI Z136.2-1997, Safe Use of Lasers in Optical Fiber Communication System Utilizing Laser

32. FAA 7400.2D, Chapter 34 Outdoor Laser/High Intensity Light Demonstrations

33. NSTS-21000-IDD-ISS, International Space Station Interface Definition Document

34. NSTS 21288, Required Data/Guidelines for Payload Shuttle EMC Analysis